HP Color LaserJet 2605, 2605dn, 2605dtn
Service Manual

Download Service Manual And Resetter Printer at http://printer1.blogspot.com

Download Service Manual And Resetter Printer at http://printer1.blogspot.com

HP Color LaserJet 2605, 2605dn, 2605dtn

Service Manual

Download Service Manual And Resetter Printer at http://printer1.blogspot.com

Copyright and License

© 2005 Copyright Hewlett-Packard Development Company, L.P.

Reproduction, adaptation, or translation without prior written permission is prohibited, except as allowed under the copyright laws.

The information contained in this document is subject to change without notice.

The only warranties for HP products and services are set forth in the express warranty statements accompanying such products and services. Nothing herein should be construed as constituting an additional warranty. HP shall not be liable for technical or editorial errors or omissions contained herein.

Q7821-90930

Edition 1, 12/2005

FCC Class A Statement

This equipment has been tested and found to comply with the limits for a Class A digital device, pursuant to Part 15 of the FCC Rules. These limits are designed to provide reasonable protection against harmful interference when the equipment is operated in a commercial environment. This equipment generates, uses and can radiate radio frequency energy and, if not installed and used in accordance with the instruction manual, may cause harmful interference to radio communications. Operation of this equipment in a residential area is likely to cause harmful interference, in which case the user will be required to correct the interference at his own expense. The end user of this product should be aware that any changes or modifications made to this equipment without the approval of Hewlett-Packard could result in the product not meeting the Class A limits, in which case the FCC could void the user's authority to operate the equipment.

Trademark Credits

Adobe Photoshop® and PostScript® are trademarks of Adobe Systems Incorporated.

CorelDRAW™ is a trademark or registered trademark of Corel Corporation or Corel Corporation Limited.

Microsoft®, Windows®, and Windows NT® are U.S. registered trademarks of Microsoft Corporation.

Netscape™ and Netscape Navigator™ are U.S. trademarks of Netscape Communications Corporation.

TrueType™ is a U.S. trademark of Apple Computer, Inc.

ENERGY STAR® and the ENERGY STAR logo® are U.S. registered marks of the United States Environmental Protection Agency. Details on the proper use of the marks are explained in the "Guidelines for Proper use of the ENERGY STAR® Name and International Logo."

Download Service Manual And Resetter Printer at http://printer1.blogspot.com

Table of contents

1 Printer basics

Printer configurations 2
HP Color LaserJet 2605 printer 2
HP Color LaserJet 2605dn printer 2
HP Color LaserJet 2605dtn printer 3
Printer features 4
Walkaround 6
Software 8
Software and supported operating systems 8
Print-media specifications 9
General guidelines 9
Paper and print media 9
Printing and storage environment 10
Envelopes 10
Labels 12
Transparencies 13
HP LaserJet glossy paper and HP LaserJet Photo paper 13
Letterhead or preprinted forms 13
HP LaserJet Tough paper 13
Custom-sized print media or cardstock 14
Supported media weights and sizes 14

2 Installation

Site preparation 18
Operating environment 18
Minimum system requirements 19
Requirements for PC systems 19
Requirements for Macintosh systems (non-PostScript) 19
Package contents 20
Install input devices 21
Installing Tray 3 (2605dtn) 21
Loading Tray 1 21
Loading Trays 2 and 3 23

3 Managing and maintenance

Control panel menus 30
Using the control panel menus 30
Control panel menu map 30
Managing supplies 32

Download Service Manual And Resetter Printer at http://printer1.blogspot.com

Supplies life 32
Checking and ordering supplies 32
To check status and order using the control panel 32
To check and order supplies using HP ToolboxFX 32
To check and order using HP Web Jetadmin 33
Storing supplies 33
Replacing and recycling supplies 33
HP policy on non-HP supplies 33
Resetting the printer for non-HP supplies 33
HP anti-counterfeit website 34
Cleaning the printer 35
To remove toner build-up 35
To clean the paper path using HP ToolboxFX 37
Cartridge out override 38
Configuration 38
On-going operation 38
Calibrating the printer 39
To calibrate the printer at the printer 39
To calibrate the printer from the HP ToolboxFX 39
Managing the printer 40
Device pages and reports 40
Demo page 40
Configuration page 40
Supplies Status page 41
Networking page 43
Fonts pages 43
Usage page 43
Menu map 43
HP ToolboxFX 44
To view HP ToolboxFX 44
Status 45
Event log 45
Alerts 46
Set up status alerts 46
Set up e-mail alerts 46
Help 46
Device settings 47
Device information 47
Paper handling 48
Printing 48
PCL5e 48
PostScript 49
Print quality 49
Print density 49
Paper types 50
Memory card (HP Color LaserJet 2605dtn) 50
System setup 51
Service 51
Network settings 51
Using the embedded Web server 51

Download Service Manual And Resetter Printer at http://printer1.blogspot.com

To access the embedded Web server using a network connection 52
Information tab 52
Settings tab 53
Networking tab 53
Other links in HP ToolboxFX 53

4 Operational theory
Engine control system 56
Basic sequence of operation 56
Power-on sequence 57
Motors and fans 57
Main motor failure detection 58
Fan motor failure detection 58
Image formation system 59
Image formation process 61
Latent image formation 62
Laser/scanner system 63
Developing stage 63
Print cartridge 64
Transfer belt (ETB) 65
Transfer stage 66
Separation stage 67
Fusing stage 67
Pickup and feed system 69
Manual feed slot pickup mechanism 71
Paper feed mechanism 71
Skew correction by the registration shutter 71
Jam detection 72
Solenoid, motor, and fan locations 73
Printed circuit assembly locations 73
250-sheet tray solenoid and printed circuit locations 74
Duplexing mechanism 75
Service-only tools (SERVICE ONLY) 80
General timing chart 80
Printer calibration 81

5 Removal and replacement
Overview 84
Service approach 85
Pre-service procedures 85
Removal and replacement procedures 86
Print cartridge replacement 86
ETB removal and replacement 89
Fuser removal and replacement 97
Formatter removal and replacement 105
DC controller removal and replacement 108
Separation assembly removal and replacement 111
Paper-pickup roller removal and replacement 112
Control panel removal and replacement 114
Memory-card assembly removal and replacement 119

Download Service Manual And Resetter Printer at http://printer1.blogspot.com

Duplexing drive unit removal and replacement 124
Duplexing-driver PCA removal and replacement 129

6 Troubleshooting
Troubleshooting process 134
Troubleshooting checklist 134
Control-panel messages 136
Alert and warning messages 136
Status-log messages 140
Clearing jams 142
Where to look for jams 142
To clear jams from inside the printer 143
To clear jams from the duplex area (HP Color LaserJet 2605dn and 2605dtn models only) 144
To clear jams from the top bin (HP Color LaserJet 2605) 146
To clear jams from the top output area (HP Color LaserJet 2605dn and 2605dtn models only) 147
To clear jams from Tray 2 or optional Tray 3 149
E-Label reader guide pin damage 150
Print problems 151
Printed image quality problems 151
Improving print quality 151
Paper Types menu 151
Print Modes menu 151
Print quality menu 152
Understanding print-quality settings 153
To temporarily change print-quality settings 153
To change print-quality settings for all future jobs 153
Identifying and correcting printed image defects 153
Print-quality checklist 154
General print quality issues 154
Solving issues with color documents 158
Paper handling issues 160
Wrong size/type media 160
Cannot select a tray or feature to use 161
Performance problems 161
Functional tests (SERVICE ONLY) 163
Engine-test print 163
Service mode functions (SERVICE ONLY) 164
Cold reset 164
NVRAM initializer 164
Super NVRAM initializer 164
Restoring page counts and serial number 165
Cleaning the ETB 165
Troubleshooting tools 166
Printer pages and reports 166
Demo page 166
Configuration page 167
Supplies Status page 167
Fuser cleaning page 167

Download Service Manual And Resetter Printer at http://printer1.blogspot.com

Print quality troubleshooting pages 167
Status log 167
Event log 168
Service menu 169
Service menu settings 169
Restoring the factory-set defaults 169
To restore the factory-set defaults 169
Secondary service menu 169
HP ToolboxFX 171
HP ToolboxFX 171
To view HP ToolboxFX 171
Troubleshooting tab 171
Print quality troubleshooting pages 171
Printer calibration 171
Cleaning page 172
Configuration page 172
Diagnostic resources 173
Reports menu 173
Network/Web diagnostics tools 173
Repetitive-image-defect ruler 174
Firmware and software updates 175

7 Parts and diagrams

Overview 178
Assembly locations 182
Covers 188
Internal assemblies 192
Input devices 210
Diagrams 222
Alphabetical parts list 223
Numerical parts list 226

Appendix A Specifications

Printer specifications 230

Appendix B Service and support

Hewlett-Packard limited warranty statement 234
Print Cartridge Limited Warranty Statement 235
HP Customer Care 236
Availability of support and service 238
HP Care Pack™ Services and Service Agreements 238
Repacking the printer 239
To repack the printer 239
Service information form 240

Appendix C Regulatory information

Introduction 242
FCC regulations 243
Environmental Product Stewardship program 244

Download Service Manual And Resetter Printer at http://printer1.blogspot.com

Protecting the environment 244
Ozone production 244
Power consumption 244
HP LaserJet printing supplies 244
Disposal of waste equipment by users in private households in the European Union 245
Material safety data sheet 246
Declaration of conformity 247
Country/region-specific safety statements 248
Laser safety statement 248
Canadian DOC statement 248
Korean EMI statement 248
VCCI statement (Japan) 248
Finnish laser statement 249

Index 251

Download Service Manual And Resetter Printer at http://printer1.blogspot.com

1 Printer basics

This section provides information about the following topics:

- Printer configurations
- Printer features
- Walkaround
- Software
- Print-media specifications

Download Service Manual And Resetter Printer at http://printer1.blogspot.com

Printer configurations

Thank you for purchasing the HP Color LaserJet 2605 Series printer. This printer is available in the configurations described below.

HP Color LaserJet 2605 printer

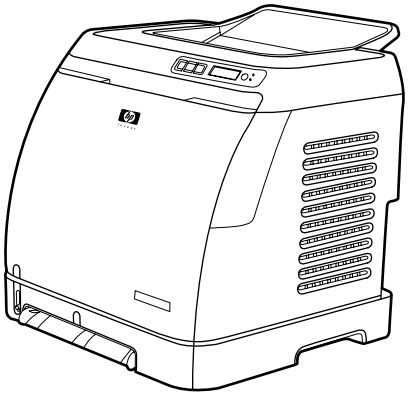

The HP Color LaserJet 2605 printer is a four-color laser printer that prints 10 pages per minute (ppm) in color and 12 ppm in monochrome (black and white).

- **Trays.** The printer comes with a single sheet priority feed slot (Tray 1) and a universal tray (Tray 2) that holds up to 250 sheets of various paper types and sizes or 10 envelopes. It supports an optional 250-sheet paper tray (optional Tray 3). See Print-media specifications on page 9 for more information.
- **Connectivity.** The printer provides a Hi-Speed USB 2.0 port for connectivity.
- **Memory.** The printer contains 64 megabytes (MB) of synchronous dynamic random access memory (SDRAM). To allow for memory expansion, the printer has one DIMM slot that accepts 256 MB RAM. This printer can support up to 320 MB of memory.

HP Color LaserJet 2605dn printer

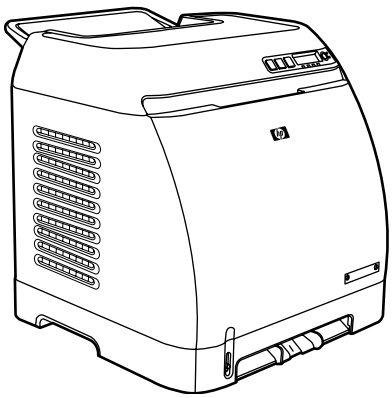

Download Service Manual And Resetter Printer at http://printer1.blogspot.com

The HP Color LaserJet 2605dn printer is a four-color laser printer that prints 10 ppm in color and 12 ppm in monochrome (black and white).

- **Trays**. The printer comes with a single sheet priority feed slot (Tray 1) and a universal tray (Tray 2) that holds up to 250 sheets of various paper types and sizes or 10 envelopes. It supports an optional 250-sheet paper tray (optional Tray 3). See Print-media specifications on page 9 for more information.
- **Connectivity**. The printer provides a USB port for connectivity and an HP built-in internal print server for connecting to a 10/100Base-T network.
- **Memory**. The printer contains 64 megabytes (MB) of synchronous dynamic random access memory (SDRAM). To allow for memory expansion, the printer has one DIMM slot that accepts 256 MB RAM. This printer can support up to 320 MB of memory.
- **Print on Both Sides**. The printer can automatically print on both sides.

HP Color LaserJet 2605dtn printer

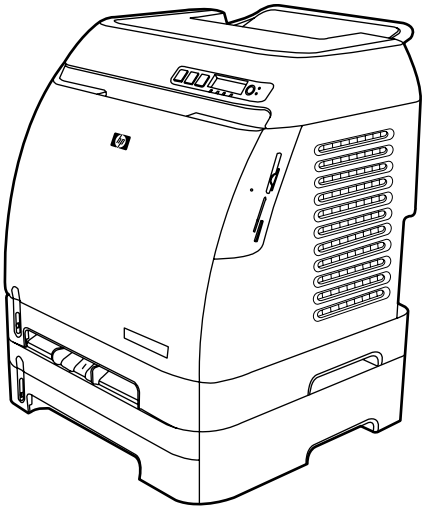

The HP Color LaserJet 2605dtn printer includes the features of the HP Color LaserJet 2605dn printer, but has an additional 250-sheet paper tray (Tray 3) and four memory card slots.

Download Service Manual And Resetter Printer at http://printer1.blogspot.com

Printer features

Feature	HP Color LaserJet 2605 Series printer
Color printing	• Provides laser printing in full color by using the four process colors: cyan, magenta, yellow, and black (CMYK).
Fast print speed	• Prints in black on A4/letter paper up to 12 ppm. Prints in color on A4/letter at 10 ppm.
Excellent print quality	• ImageREt 2400 provides 2400 dpi equivalent-color quality through a multilevel printing process. • True 600 by 600 dots per inch (dpi) text and graphics. • Adjustable settings to optimize print quality. • The HP UltraPrecise print cartridge has a finer toner formulation that provides sharper text and graphics.
Ease of use	• Few supplies to order. Supplies are easy to install. • Convenient access to printer information and settings by using the HP ToolboxFX software. • Convenient access to all supplies and to the paper path through the front door.
Flexible paper handling	• Trays 1 and 2 for letterhead, envelopes, labels, transparencies, custom-sized media, postcards, HP LaserJet glossy paper, HP LaserJet Tough paper, heavy paper, and HP Laser Photo paper. • A 125-sheet top output bin. • Print on both sides manually. • Print on both sides automatically (HP Color LaserJet 2605dn and HP Color LaserJet 2605dtn models only).
PostScript® (PS) level 3 emulation language and fonts	Includes 35 built-in PS language fonts.
Interface connections	• Hi-Speed USB port. • The HP Color LaserJet 2605dn and 2605dtn printers includes an HP built-in internal print server for connecting to a 10/100Base-T network.
Energy savings	• The printer automatically conserves electricity by substantially reducing power consumption when it is not printing. • As an ENERGY STAR® partner, Hewlett-Packard Company has determined that this product meets ENERGY STAR® guidelines for energy efficiency. ENERGY STAR® is a U.S. registered service mark of the United States Environmental Protection Agency.
Economical printing	• N-up printing (printing more than one page on a sheet) and Printing on Both Sides features save paper.

Download Service Manual And Resetter Printer at http://printer1.blogspot.com

Feature	HP Color LaserJet 2605 Series printer
Supplies	• A Supplies Status page with print cartridge gauges that show the supply levels that remain. For HP supplies only. • No-shake cartridge design. • Authentication for HP print cartridges. • Enabled supplies-ordering capability.
Accessibility	• Online user guide that is compatible with text screen-readers. • All doors and covers can be opened by using one hand.
Expandability	• Optional Tray 3 (standard on HP Color LaserJet 2605dtn). This 250-sheet universal tray reduces how often you have to add paper to the printer. Only one additional 250-sheet tray can be installed on the printer. • Optional HP Jetdirect external print server for connecting to a network. • One DIMM slot for adding memory and fonts.
Memory card slots (HP Color LaserJet 2605dtn only)	The following memory cards are supported: • CompactFlash • Memory Stick and Memory Stick PRO • MultiMedia • Secure Digital (SD) • SmartMedia • xD

Download Service Manual And Resetter Printer at http://printer1.blogspot.com

Walkaround

The following illustrations identify the locations and names of key components of this printer.

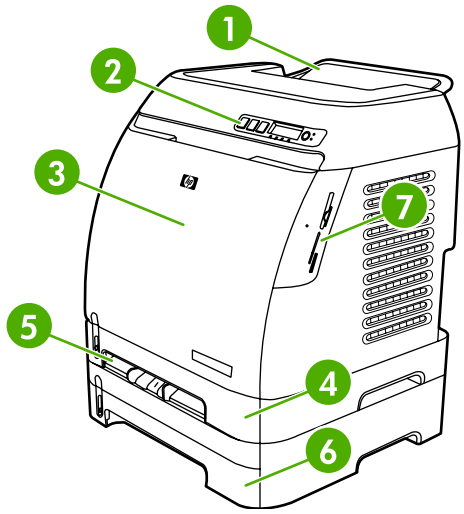

Figure 1-1 Front view (HP Color LaserJet 2605dtn shown)

1	Output bin
2	Printer control panel
3	Front door
4	Tray 2 (250 sheets)
5	Tray 1 (single-sheet priority feed slot)
6	Tray 3 (optional; 250 sheets)
7	Memory card slots (HP Color LaserJet 2605dtn only)

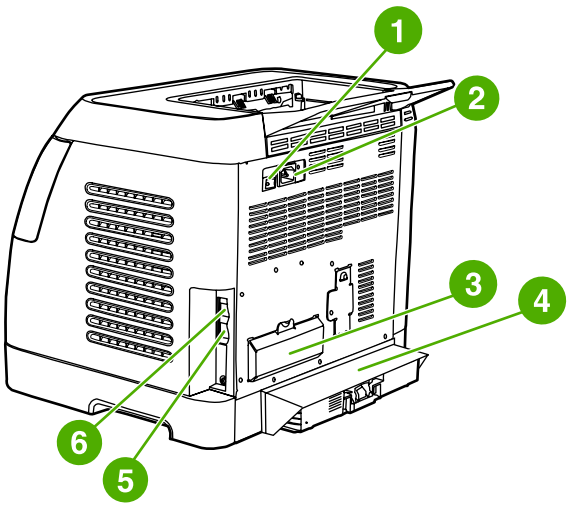

Figure 1-2 Back and side view

1	Power switch

Download Service Manual And Resetter Printer at http://printer1.blogspot.com

2	Power connection
3	DIMM access door
4	Dust cover
5	HP built-in internal print server for connecting to a 10/100Base-T network (HP Color LaserJet 2605dn and 2605dtn)
6	USB connection

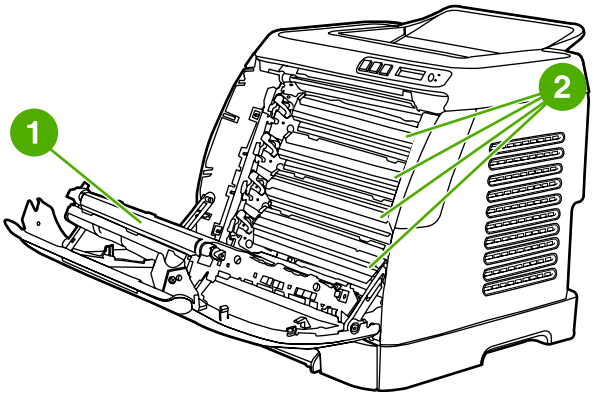

Figure 1-3 Front view, cartridge door open

1	Transfer belt (ETB)
2	Print cartridges

CAUTION Do not place anything on the transfer belt, which is located on the inside of the front door. Otherwise, the printer may be damaged, adversely affecting print quality.

Download Service Manual And Resetter Printer at http://printer1.blogspot.com

Software

Software and supported operating systems

For easy printer setup and access to the full range of printer features, HP strongly recommends that you install the software that is provided. Not all software is available in all languages. See the *Getting Started Guide* for installation instructions, and see the Readme file for the latest software information.

The most recent drivers, additional drivers, and other software are available from the Internet and other sources. If you do not have access to the Internet, see HP Customer Care on page 236.

The printer supports the following operating systems:

- Microsoft® Windows® 98 Second Edition, Windows Millennium Edition (Me), and Windows® Server 2003 (Add Printer installation)
- Microsoft® Windows® 2000 and Windows XP
- Macintosh OS X v10.2 and later

The following tables list the software that is available for your operating system.

Table 1-1 HP Color LaserJet 2605 Series printer software

Feature	Windows 98 Second Edition, Me, and Server 2003	Windows 2000 and XP	Macintosh OS X v10.2 and later
Windows Installer		✔	
PCL printer driver	✔	✔	
PS printer driver	✔	✔	
HP Web Jetadmin software		✔	
HP ToolboxFX software		✔	
HP imaging software		✔	
Macintosh Installer			✔
Macintosh printer drivers			✔

Download Service Manual And Resetter Printer at http://printer1.blogspot.com

Print-media specifications

This section contains information about specifications for the quality of print media, guidelines for print media usage, and guidelines for print media storage.

General guidelines

Some print media might meet all of the guidelines in this manual and still not produce satisfactory results. This problem might be the result of improper handling, unacceptable temperature and humidity levels, or other variables over which Hewlett-Packard has no control.

Before purchasing large quantities of print media, always test a sample and make sure that the print media meets the requirements specified in this user guide and in the *HP LaserJet Printer Family Print Media Guide*.

CAUTION Using print media that does not meet HP specifications can cause problems for the printer, requiring repair. This repair is not covered by the Hewlett-Packard warranty or service agreements.

CAUTION Use only paper designed for laser printers. Paper for inkjet printers may damage the printer.

This printer accepts a variety of media, such as cut-sheet paper (including up to 100% recycled-fiber-content paper), envelopes, labels, transparencies, HP LaserJet glossy paper, HP LaserJet Tough paper, HP LaserJet Photo paper, and custom-size paper. Properties such as weight, composition, grain, and moisture content are important factors that affect printer performance and output quality. Print media that does not meet the guidelines outlined in this manual can cause the following problems:

- Poor print quality
- Increased jams
- Premature wear on the printer, requiring repair

Paper and print media

Print-media specifications for the HP LaserJet 2605 Series printer are listed in Table 1-2 Print-media specifications on page 9.

Table 1-2 Print-media specifications

Category	Specifications
Acid content	5.5 pH to 8.0 pH
Caliper	0.094 to 0.18 mm (3.0 to 7.0 mils)
Curl in ream	Flat within 5 mm (0.02 inch)
Cut-edge conditions	Cut with sharp blades with no visible fray
Fusing compatibility	Must not scorch, melt, offset, or release hazardous emissions when heated to 210°C (410°F) for 0.1 second
Grain	Long Grain

Download Service Manual And Resetter Printer at http://printer1.blogspot.com

Table 1-2 Print-media specifications (continued)

Category	Specifications
Moisture content	4% to 6% by weight
Smoothness	100 to 250 Sheffield

For complete print-media specifications for all HP LaserJet printers, see the *HP LaserJet Printer Family Print Media Guide*. To download the guide in PDF format, go to http://www.hp.com/support/ljpaperguide.

Printing and storage environment

Ideally, the printing and media-storage environment should be at or near room temperature, and not too dry or too humid. Remember that paper is hygroscopic; it absorbs and loses moisture rapidly.

Heat causes the moisture in paper to evaporate, while cold causes it to condense on the sheets. Heating systems and air conditioners remove most of the humidity from a room. As paper is opened and used, it loses moisture, causing streaks and smudging. Humid weather or water coolers can cause the humidity to increase in a room. As paper is opened and used it absorbs any excess moisture, causing light print and dropouts. Also, as paper loses and gains moisture it can distort. This issue can cause jams.

As a result, paper storage and handling are as important as the paper-making process itself. Paper storage environmental conditions directly affect the feed operation and print quality.

Care should be taken not to purchase more paper than can be easily used in a short time (about three months). Paper stored for long periods can experience heat and moisture extremes, which can cause damage. Planning is important to prevent damage to a large supply of paper.

Unopened paper in sealed reams can remain stable for several months before use. Opened packages of paper have more potential for environmental damage, especially if they are not wrapped with a moisture-proof barrier.

The media-storage environment should be properly maintained to ensure optimum printer performance. The recommended condition is 20° to 24°C (68° to 75°F), with a relative humidity of 45% to 55%. The following guidelines should be helpful when evaluating the paper's storage environment:

- Print media should be stored at or near room temperature.
- The air should not be too dry or too humid (to moderate the hygroscopic properties of paper).
- The best way to store an opened ream of paper is to rewrap it tightly in its moisture-proof wrapping. If the printer environment is subject to extremes, unwrap only the amount of paper to be used during the day's operation to prevent unwanted moisture changes.
- Avoid storing paper and print media near heating and air conditioning vents or near windows and doors that are frequently open.

Envelopes

Envelopes can be printed from Tray 1 or Tray 2. Select the type of envelope that you are using from the **Print** dialog box or the printer driver.

Download Service Manual And Resetter Printer at http://printer1.blogspot.com

In your program, set the margins for the envelope. The following table gives typical address margins for a commercial #10 or DL envelope.

Type of address	Top margin	Left margin
Return address	15 mm (0.6 inch)	15 mm (0.6 inch)
Delivery address	51 mm (2 inches)	89 mm (3.5 inches)

- For the best print quality, position margins no closer than 15 mm (0.6 inch) from the edges of the envelope.
- Avoid printing over the area where the envelope seams meet.

Envelope storage

Proper storage of envelopes helps contribute to print quality. Envelopes should be stored flat. If air is trapped in an envelope and creates an air bubble, then the envelope might wrinkle during printing.

Envelope construction

Envelope construction is critical. Envelope fold lines can vary considerably, not only between manufacturers, but also within a box from the same manufacturer. Successful printing on envelopes depends upon the quality of the envelopes. When selecting envelopes, consider the following components:

- **Weight:** The weight of the envelope paper should not exceed 90 g/m^2 (24 lb) or jamming might occur.
- **Construction:** Before printing, envelopes should lie flat with less than 6 mm (0.25 inch) curl, and should not contain air.
- **Condition:** Envelopes should not be wrinkled, nicked, stuck together, or otherwise damaged.

  Never use envelopes that have clasps, snaps, windows, coated linings, self-stick adhesives, or other synthetic materials.
- **Temperature:** Use envelopes that are compatible with the heat and pressure of the printer. This printer's fusing temperature is 210°C (410°F).
- **Size:** Use only envelopes that are within the following size ranges.

Tray	Minimum	Maximum
Tray 1 or Tray 2	76 x 127 mm (3 x 5 inches)	216 x 356 mm (8.5 x 14 inches)

Envelopes with double side-seams

Double side-seam construction has vertical seams at both ends of the envelope rather than diagonal seams. This style might be more likely to wrinkle. Be sure the seam extends all the way to the corner of the envelope as indicated in the following illustration.

Download Service Manual And Resetter Printer at http://printer1.blogspot.com

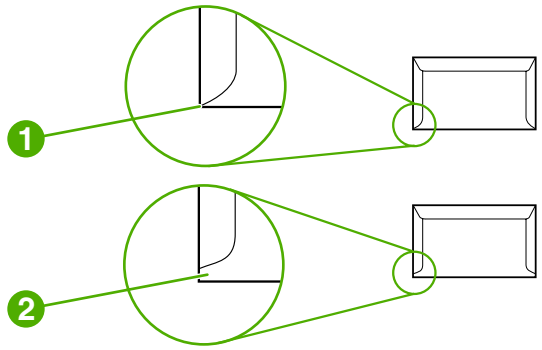

1	Acceptable
2	Unacceptable

Envelopes with adhesive strips or flaps

Envelopes with a peel-off adhesive strip or with more than one flap that folds over to seal must use adhesives that are compatible with the heat and pressure in the printer. The extra flaps and strips might cause wrinkling, creasing, or even jams and might damage the fuser.

CAUTION Failure to follow the guidelines above can result in jams.

For instructions on loading envelopes, see Loading Tray 1 on page 21 or Loading Trays 2 and 3 on page 23.

Labels

Select the type of label that you are using from the **Print** dialog box or the printer driver.

CAUTION To avoid damaging the printer, use only labels that are recommended for laser printers. To prevent serious jams, always use Tray 1 or Tray 2 to print on labels. Never print on the same sheet of labels more than once or print on a partial sheet of labels.

When selecting labels, consider the quality of each component:

- **Adhesives:** The adhesive material should be stable at 210°C (410°F), which is the printer fusing temperature.
- **Arrangement:** Only use labels with no exposed backing between them. Labels can peel off sheets with spaces between the labels, causing serious jams.
- **Curl:** Before printing, labels must lie flat with no more than 13 mm (0.5 inch) of curl in any direction.
- **Condition:** Do not use labels that have wrinkles, bubbles, other indications of separation, or are damaged in any way.

For instructions on loading labels, see Loading Tray 1 on page 21 or Loading Trays 2 and 3 on page 23.

Download Service Manual And Resetter Printer at http://printer1.blogspot.com

Transparencies

- Use only Tray 1 or Tray 2 to print on transparencies. Select **Transparencies** from the **Print** dialog box or the printer driver.
- The printer supports printing on color transparencies. Use only transparencies that are recommended for use in laser printers.
- Place transparencies on a flat surface after removing them from the printer.
- Transparencies that are used in the printer must be able to withstand 210°C (410°F), which is the printer fusing temperature.

CAUTION To avoid damage to the printer, use only transparencies that are recommended for use in laser printers.

Transparent print media that is not designed for LaserJet printing will melt in the printer, and will damage the printer.

HP LaserJet glossy paper and HP LaserJet Photo paper

- Handle HP LaserJet glossy paper and HP LaserJet Photo paper by the edges. Oil from your fingers that is deposited on HP LaserJet glossy paper and HP LaserJet Photo paper can cause print-quality problems.
- Use only HP LaserJet glossy paper and HP LaserJet Photo paper with this printer. HP products are designed to work together for optimum printing results.

Letterhead or preprinted forms

- Avoid using raised or embossed letterhead.
- Avoid using letterhead that is printed with low-temperature inks, such as those used in some types of thermography.
- The printer uses heat and pressure to fuse toner to the print media. Make sure that any colored paper or preprinted forms use inks that are compatible with this fusing temperature (210°C (410° F) for 0.1 second).

For instructions on loading letterhead, see Loading Tray 1 on page 21 and Loading Trays 2 and 3 on page 23.

HP LaserJet Tough paper

When printing on HP LaserJet Tough paper, follow these guidelines:

- Handle HP LaserJet Tough paper by the edges. Oil from your fingers that is deposited on HP LaserJet Tough paper can cause print-quality problems.
- Use only HP LaserJet Tough paper with this printer. HP products are designed to work together for optimum printing results.

Download Service Manual And Resetter Printer at http://printer1.blogspot.com

Custom-sized print media or cardstock

- Postcards, 3 x 5-inch (index) cards, and other custom-sized print media can be printed on from Tray 1, Tray 2, or optional Tray 3. The minimum size is 76 x 127 mm (3 x 5 inches) and the maximum size is 216 x 356 mm (8.5 x 14 inches). See Print-media specifications on page 9 for more information.
- Always insert the short edge first into Tray 1, Tray 2, or optional Tray 3. To print in landscape mode, make this selection through your program. Inserting the media long-edge-first might cause a jam.
- In your program, set margins at least 6.4 mm (0.25 inch) away from the edges of the print media.

For instructions on loading paper, see Loading Tray 1 on page 21 and Loading Trays 2 and 3 on page 23.

Supported media weights and sizes

This section contains information about the sizes, weights, and capacities of paper and other print media that each tray supports.

Download Service Manual And Resetter Printer at http://printer1.blogspot.com

Table 1-3 Tray 1 and Tray 2 specifications

Tray 1 and Tray 2	Dimensions[1]	Weight	Capacity[2]
Paper	Minimum: 76 x 127 mm (3 x 5 inches) Maximum: 216 x 356 mm (8.5 x 14 inches)	60 to 163 g/m² (16 to 43 lb) Up to 176 g/m² (47 lb) for postcards	Single sheet of 75 g/m² (20 lb) paper for Tray 1 Up to 250 sheets for Tray 2
HP LaserJet glossy paper and HP LaserJet Photo paper[4]	Same as the preceding listed minimum and maximum sizes.	75 to 220 g/m² (20 to 58 lb)	Single sheet of HP LaserJet glossy paper or HP LaserJet Photo paper for Tray 1 Up to 25 mm (0.99 inch) stack height for Tray 2
HP Premium Cover paper[4]		200 g/m² (53 lb)	Single sheet of HP Cover paper for Tray 1 Up to 25 mm (0.99 inch) stack height for Tray 2
Transparencies and opaque film		Thickness: 0.10 to 0.13 mm (3.9 to 5.1 mils)	Single sheet of transparency or opaque film for Tray 1 Up to 50 sheets for Tray 2
Labels[3]		Thickness: up to 0.23 mm (up to 9 mils)	Single sheet of labels for Tray 1 Up to 25 mm (0.99 inch) stack height for Tray 2
Envelopes		Up to 90 g/m² (up to 24 lb)	Single envelope for Tray 1 Up to ten envelopes for Tray 2

1 The printer supports a wide range of standard and custom sizes of print media. Check the printer driver for supported sizes.
2 Capacity can vary depending on media weight and thickness, and environmental conditions.
4 Hewlett-Packard does not guarantee results when printing with other types of heavy paper.
3 Smoothness: 100 to 250 (Sheffield).

Table 1-4 Optional Tray 3 specifications

Optional Tray 3 (250-sheet tray)	Dimensions[1]	Weight	Capacity[2]
Plain paper	Minimum: 76 x 127 mm (3 x 5 inches) Maximum: 216 x 356 mm (8.5 x 14 inches)	60 to 163 g/m² (16 to 43 lb)	Up to 200 sheets

1 The printer supports a wide range of standard and custom sizes of print media. Check the printer driver for supported sizes.
2 Capacity can vary depending on the media weight and thickness, and environmental conditions.

Table 1-5 Specifications for automatic 2-sided printing

Tray 1, Tray 2, and optional Tray 3	Dimensions[1]	Weight	Capacity[2]
Paper	Letter, A4, legal, 8.5 x 13 inches	60 to 105 g/m² (16 to 28 lb)	Single sheet for Tray 1

Download Service Manual And Resetter Printer at http://printer1.blogspot.com

Table 1-5 Specifications for automatic 2-sided printing (continued)

Tray 1, Tray 2, and optional Tray 3	Dimensions[1]	Weight	Capacity[2]
			Up to 250 sheets for Tray 2 and optional Tray 3
HP LaserJet glossy paper	Letter, A4	75 to 120 g/m^2 (20 to 32 lb)	Single sheet for Tray 1 Up to 250 sheets for Tray 2 and optional Tray 3

1 The printer supports a wide range of standard and custom sizes of print media. Check the printer driver for supported sizes.

2 Capacity can vary depending on the media weight and thickness, and environmental conditions.

Download Service Manual And Resetter Printer at http://printer1.blogspot.com

2 Installation

This chapter contains information about the following topics:

- Site preparation
- Package contents
- Install input devices

Download Service Manual And Resetter Printer at http://printer1.blogspot.com

Site preparation

Below are recommendations for the printer location and placement.

Operating environment

The printer must be kept in a proper location to maintain the performance level that has been set at the factory. In particular, be sure that the environment adheres to the specifications listed in this chapter.

The printer must have 2 inches of space above and around it.

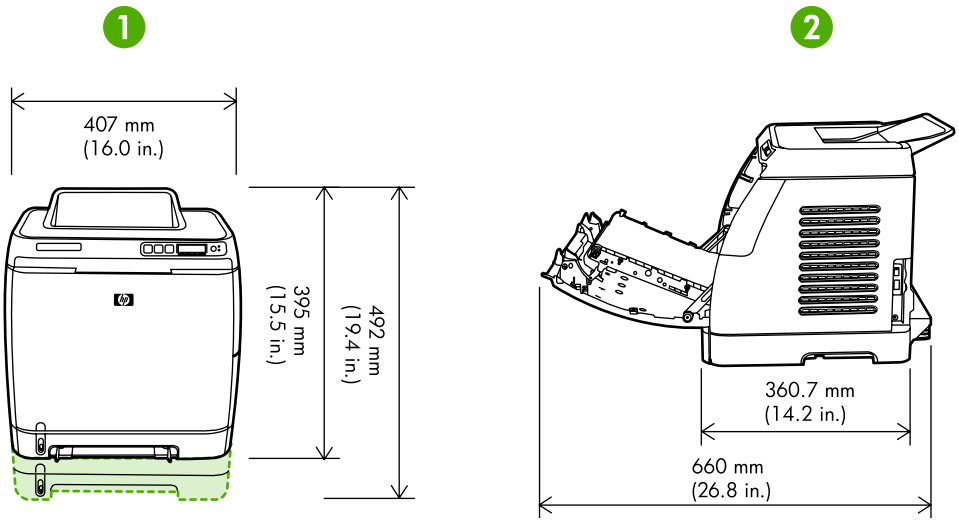

Figure 2-1 Printer dimensions

1	Front view
2	Side view

Make sure the printer is in a location that has the following:

- A well-ventilated, dust-free area
- A surface that will support up to 18 kg (40 lbs)
- A constant temperature and humidity (Do not install near water sources, humidifiers, air conditioners, refrigerators, or other major appliances.)
- A hard, level surface (not more than a 2° angle)

Make sure to keep the printer away from the following:

- Direct sunlight, dust, open flames, or water
- Direct flow of exhaust from air ventilation systems
- Magnets and devices that emit a magnetic field

Download Service Manual And Resetter Printer at http://printer1.blogspot.com

- Areas subject to vibration
- Walls or other objects. There must be enough space around the printer for proper access and ventilation

Minimum system requirements

The minimum system requirements for the HP Color LaserJet 2605, 2605dn, and 2605dtn printers are listed below:

- 150 MB of free hard disk space
- CD-ROM drive
- Available USB or network port

NOTE Networking is only available on Windows 2000, Windows XP, and Macintosh.

Requirements for PC systems

- Windows 98 SE and Me (driver only)
- Windows 2000 and XP (32-bit Home and Professional)
- 233 MHz processor with 64 MB RAM

Requirements for Macintosh systems (non-PostScript)

- G3 processor (G4 processor recommended)
- Mac OS X v10.2 and later

Download Service Manual And Resetter Printer at http://printer1.blogspot.com

Package contents

Figure 2-2 Package contents on page 20 lists the package contents for the HP Color LaserJet 2605, 2605dn, and 2605dtn.

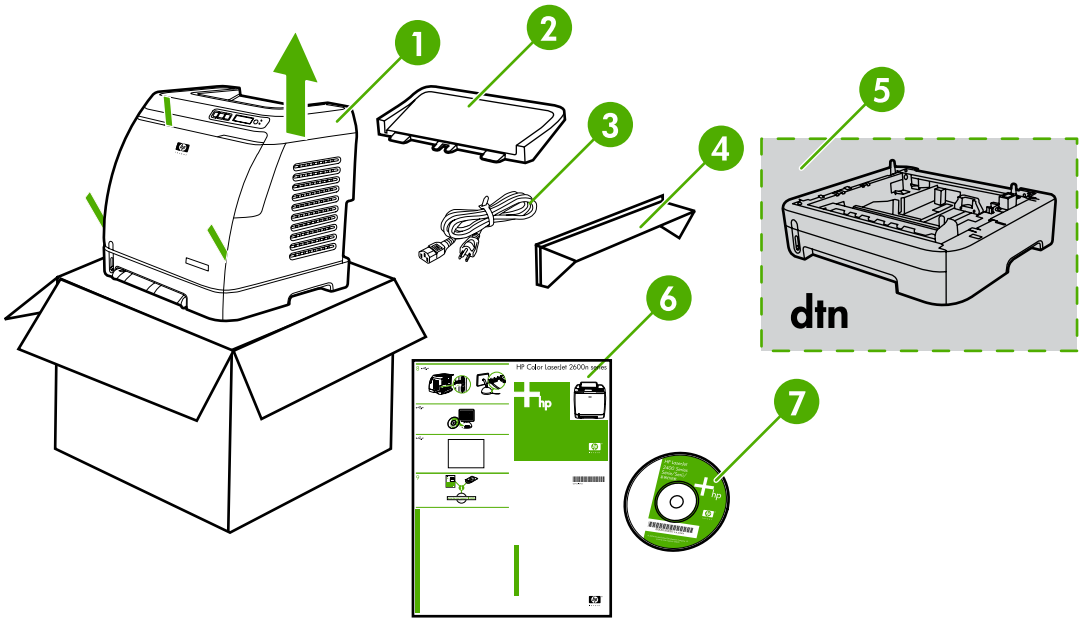

Figure 2-2 Package contents

1	HP Color LaserJet 2605 Series printer
2	Paper delivery tray
3	Power cable
4	Dust cover
5	Additional 250-sheet paper tray (optional on 2605 and 2605dn)
6	*Getting Started Guide*
7	Software and user documentation CD-ROM

Download Service Manual And Resetter Printer at http://printer1.blogspot.com

Install input devices

Installing Tray 3 (2605dtn)

1. Turn off the power switch on the printer.

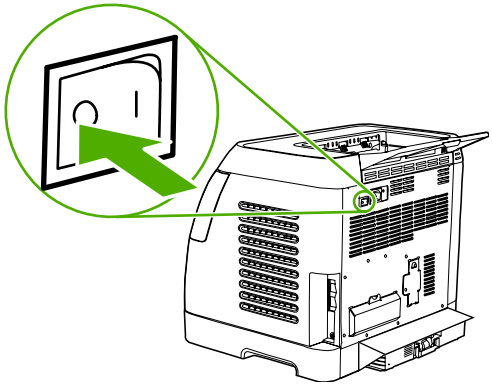

2. Unplug the power cable.

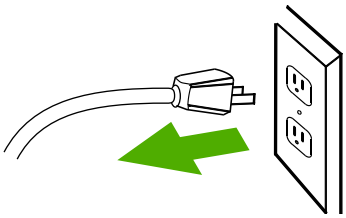

3. Place the printer on optional Tray 3, aligning the three (3) pegs on Tray 3 with the holes on the printer.

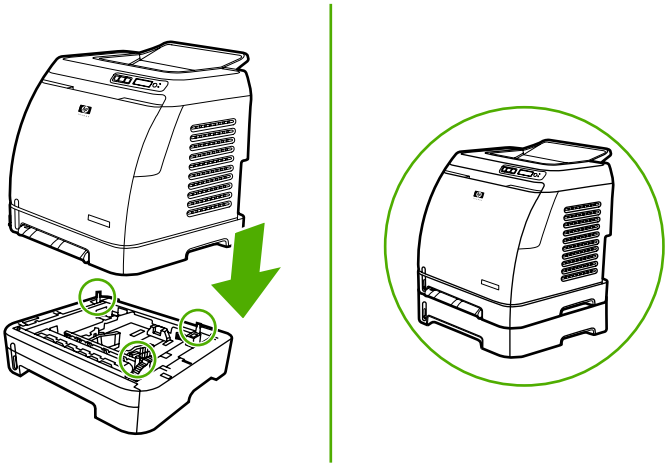

Loading Tray 1

Tray 1 (the single sheet priority feed slot) prints single sheets of print media or a single envelope. Use Tray 1 when feeding one sheet of paper, envelope, postcard, label, HP LaserJet glossy paper,

Download Service Manual And Resetter Printer at http://printer1.blogspot.com

HP LaserJet Photo paper, or transparency. You can also use Tray 1 to print the first page on different media than the rest of the document.

1. Media guides ensure that the media is correctly fed into the printer and that the print is not skewed (crooked on the media). Slide the media-width guides slightly wider than the print media.

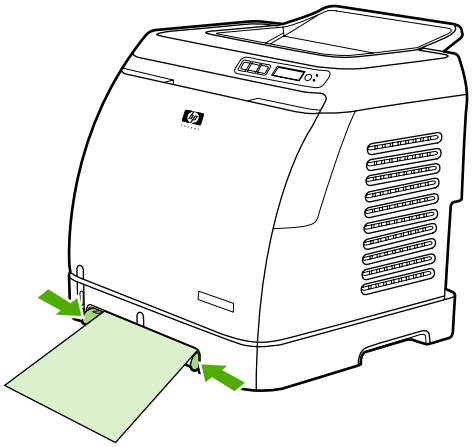

Download Service Manual And Resetter Printer at http://printer1.blogspot.com

2. Feed print media into Tray 1 with the side to be printed down, and the top, short edge in first. Make sure that the media is inserted far enough into the printer for the paper feed mechanism to grab the media.

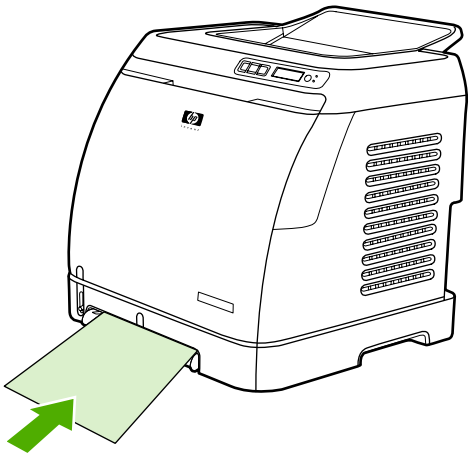

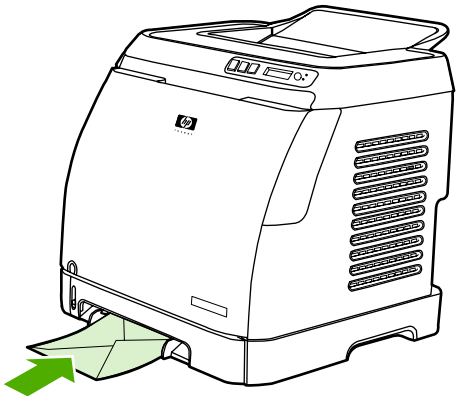

NOTE There is a short pause before the paper is picked up.

NOTE To load special media such as labels, transparencies, HP LaserJet glossy paper, HP LaserJet Photo paper, and letterhead or printed forms, feed or place the media with the side to be printed facing down.

NOTE If you are printing on both sides, see the *HP Color LaserJet 2605, 2605dn, 2605dtn User Guide* for loading instructions.

Loading Trays 2 and 3

Tray 2 and optional Tray 3 are accessed from the front of the printer and hold up to 250 sheets of paper. Tray 2 also supports other media such as envelopes, postcards, transparencies, HP LaserJet glossy paper, and HP LaserJet Photo paper.

NOTE Tray 3 is standard on HP Color LaserJet 2605dtn.

Download Service Manual And Resetter Printer at http://printer1.blogspot.com

NOTE Instructions are the same for loading media in Tray 2 and optional Tray 3.

1. Pull Tray 2 or optional Tray 3 out of the printer and remove any paper.

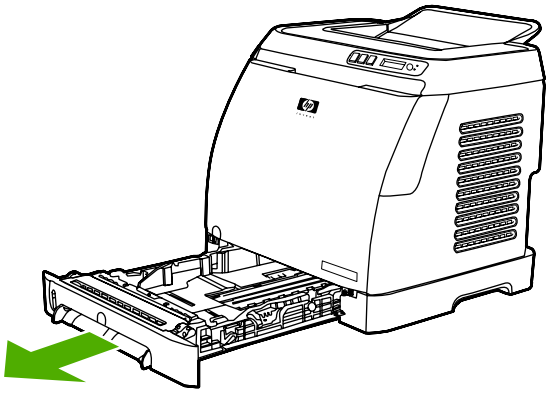

2. Move the rear guides to match the size of paper that you are loading. Tray 2 and optional Tray 3 accept several standard paper sizes.

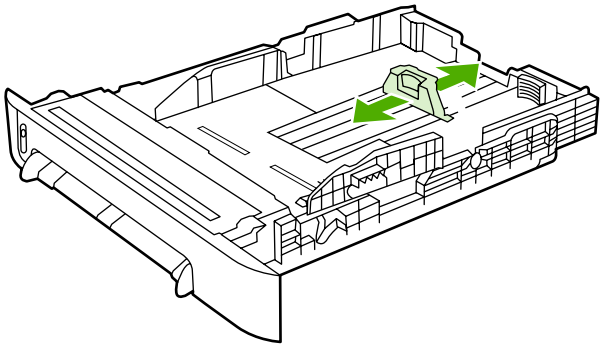

3. If printing paper longer than letter/A4, extend the rear of the tray until it matches the size you are loading.

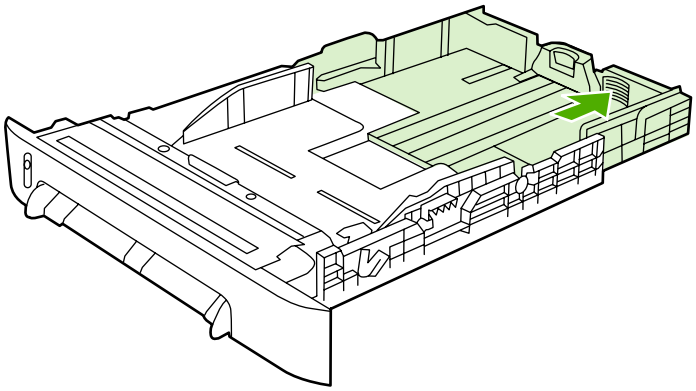

Download Service Manual And Resetter Printer at http://printer1.blogspot.com

4. Slide the media-width guides slightly wider than the print media.

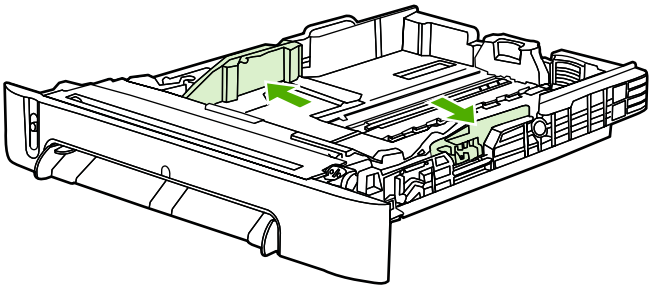

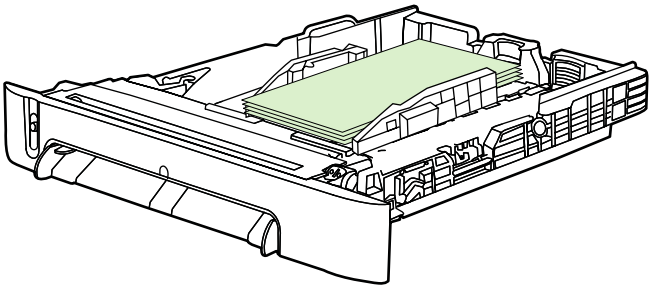

NOTE Load 10 envelopes or less into Tray 2 with the flaps on the right side, the side to be printed facing up, and with the short edge leading into the printer. If the envelope has a flap on a short edge, this edge must enter the printer first.

Download Service Manual And Resetter Printer at http://printer1.blogspot.com

5. Load the media.

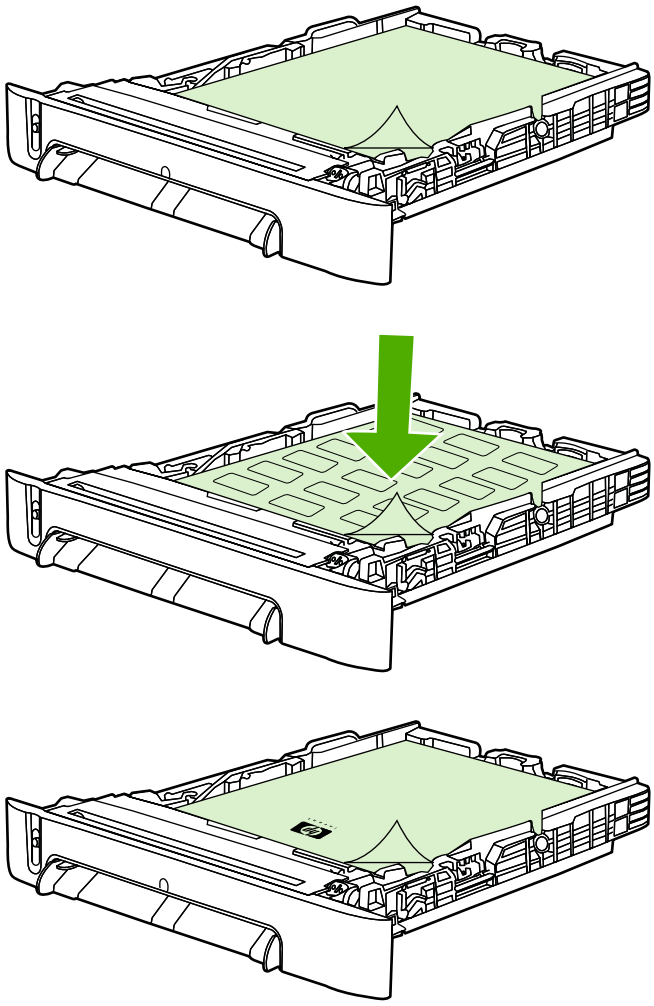

NOTE If this is special paper such as labels, transparencies, HP LaserJet glossy paper, HP LaserJet Photo paper, and letterhead or printed forms, load it with the side to be printed on facing up and the top edge toward the front of the tray. For additional information about printing on special print media, see the *HP Color LaserJet 2605, 2605dn, 2605dtn User Guide*

Download Service Manual And Resetter Printer at http://printer1.blogspot.com

6. Make sure that the stack of paper is flat in the tray at all four corners, and keep it below the height tabs on the media-length guide in the rear of the tray.

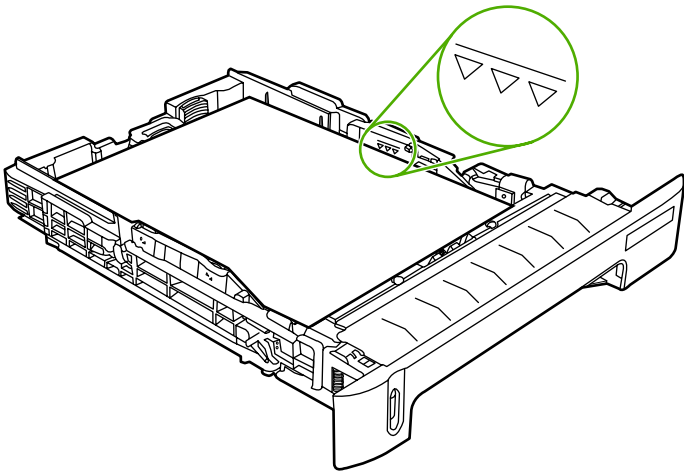

7. Slide the tray into the printer. The back of the tray will protrude from the back of the printer.

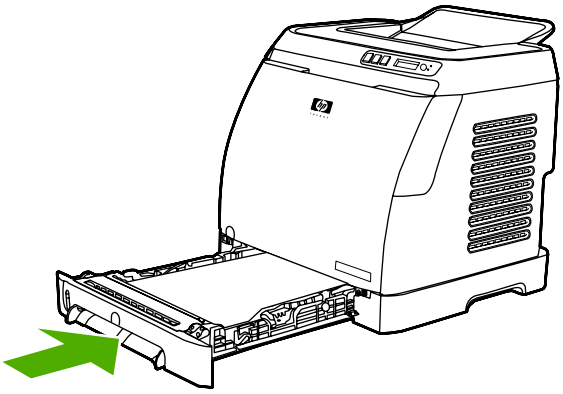

NOTE If you are printing on both sides, see the *HP Color LaserJet 2605, 2605dn, 2605dtn User Guide* for loading instructions.

Download Service Manual And Resetter Printer at http://printer1.blogspot.com

Download Service Manual And Resetter Printer at http://printer1.blogspot.com

3 Managing and maintenance

This chapter contains information about these maintenance topics:

- Control panel menus
- Managing supplies
- Cleaning the printer
- Cartridge out override
- Calibrating the printer
- Managing the printer

Download Service Manual And Resetter Printer at http://printer1.blogspot.com

Control panel menus

Using the control panel menus

To gain access to the control panel menus, use the following steps.

1. Press Select .
2. Press the Right arrow or Left arrow button to navigate the listings.
3. Press Select to select the appropriate option.
4. Press Cancel Job to cancel an action or return to the Ready state.

Control panel menu map

From the control panel **Main** menu, the following menus are available:

NOTE Default settings are indicated on the control panel by an asterisk (*).

Menu	Sub-menus and options	Description

Photo functions (HP Color LaserJet 2605dtn only)	• **Print photos**
	  • **Job settings**
	  • **Select photos**
	• **Index print**
	  • **Fast**
	  • **Best**
		Use these options to configure settings for printing photos.

Reports	• **Demo Page** • **Menu structure** • **Config report** • **Supplies Status** • **Network report** • **Usage page** • **PCL font list** • **PS font list** • **PCLXL font list**	Use these options to print various printer reports.
Photo Setup (HP Color LaserJet 2605dtn only)	• **Def. image size** • **Def. # of copies** • **Def. output color**	Use these options to set up defaults for photo printing.

Download Service Manual And Resetter Printer at http://printer1.blogspot.com

Menu	Sub-menus and options	Description

SYSTEM SETUP	• **Language** (select desired language)
	• **Paper setup**
	  • **Def. paper size** (Letter, Legal, A4)
	  • **Def. paper type** (select desired paper type)
	  • **Tray 2** (select paper type and size)
	  • **Paper out action** (Wait forever, Cancel, Override size)
	• **PRINT QUALITY**
	  • **CALIBRATE COLOR**
	  • **Cartridge low**
	  • **REPLACE SUPPLIES**
	• **Display contrast** (select desired contrast settings)
	• **Courier font**
	  • **Regular**
	  • **Dark**
		Use these menus to select system settings.

Service	• **Restore defaults**
	• **Cleaning Mode**
	• **Less paper curl**
	  • **Off**
	  • **On**
	• **Archive print**
	  • **Off**
	  • **On**
		Use these menus to calibrate, restore factory default settings, and clean the print paper path.

Network config. (HP Color LaserJet 2605dn and 2605dtn)	• **TCPIP config** • **Link Speed** • **Memory card**	Use these options to configure network settings.

Download Service Manual And Resetter Printer at http://printer1.blogspot.com

Managing supplies

For warranty information about these supplies, see Print Cartridge Limited Warranty Statement on page 235.

Supplies life

The life of a print cartridge depends on the amount of toner that print jobs require. When printing text at approximately 5% coverage, a cyan, magenta, or yellow print cartridge for the HP Color LaserJet 2605 Series printers lasts an average of 2,000 pages, and a black print cartridge lasts an average of 2,500 pages. A typical business letter has 5% coverage.

Checking and ordering supplies

You can check the supplies status by using the printer control panel, printing a Supplies Status page, or viewing the HP ToolboxFX. Hewlett-Packard recommends that you place an order for a replacement print cartridge when you first receive the Low message for a print cartridge. For typical use, the Order message indicates that approximately two weeks of life remain. When you use a new, authentic HP print cartridge, you can obtain the following types of supplies information:

- Amount of toner remaining
- Estimated number of pages remaining
- Number of pages printed
- Other supplies information

NOTE If the printer is connected to the network, you can set the HP ToolboxFX to notify you by e-mail when a print cartridge is low or is near the end of its useful life. If the printer is directly connected to a computer, you can set HP ToolboxFX to notify you when supplies are low.

To check status and order using the control panel

Do one of the following:

- Check the supplies status gauges on the printer control panel. These gauges indicate when a print cartridge is low or empty. The lights also indicate when a non-HP print cartridge is first installed.
- To print the Supplies Status page from the printer, on the printer control panel, select **Reports Menu**, and then **Supplies Status**. See Supplies Status page on page 41 for more information.

If the supplies levels are low, you can order supplies through your local HP dealer, by telephone, or online. See the *HP Color LaserJet 2605, 2605dn, 2605dtn User Guide* for part numbers. See http://www.hp.com/go/ljsupplies to order online.

To check and order supplies using HP ToolboxFX

You can configure HP ToolboxFX to notify you when the supplies are low. You can choose to receive alerts by e-mail or as a pop-up message or taskbar icon. To order supplies by using the HP ToolboxFX, in the **Other Links** area, click **Order supplies**. You must have Internet access to connect to the Web site.

For more information, see HP ToolboxFX on page 44.

Download Service Manual And Resetter Printer at http://printer1.blogspot.com

To check and order using HP Web Jetadmin

In HP Web Jetadmin, select the printer. The device status page shows supplies information. To order, use the HP ToolboxFX.

Storing supplies

Follow these guidelines for storing print cartridges:

- Do not remove the print cartridge from its package until you are ready to use it.

  CAUTION To prevent damage, do not expose the print cartridge to light for more than a few minutes.

- See Table A-4 Environmental specifications on page 231 for operating and storage temperature ranges.
- Store the supply in a horizontal position.
- Store the supply in a dark, dry location away from heat and magnetic sources.

Replacing and recycling supplies

To install a new HP print cartridge, follow the instructions that are included on the box that contains the new supply, or see the *Getting Started Guide*.

To recycle supplies, place the used supply in the box in which the new supply arrived. Use the enclosed return label to send the used supply to HP for recycling. For complete information, see the recycling guide that is included with each new HP supply item. See HP LaserJet printing supplies on page 244 for more information about HP's recycling program.

HP policy on non-HP supplies

Hewlett-Packard Company cannot recommend the use of non-HP supplies, either new or remanufactured. Because they are not HP products, HP cannot influence their design or control their quality. Service or repairs required as a result of using a non-HP supply will *not* be covered under the printer warranty.

When you insert a supply into the printer, the printer will inform you if the supply is not a genuine HP supply. If you insert a genuine HP supply that has reached the low state from another HP printer, the printer identifies the supply as non-HP. Simply return the supply to the original printer to reactivate HP features and functionality.

Resetting the printer for non-HP supplies

When you install a non-HP print cartridge, the light next to the print cartridge you replaced blinks and the Attention light is on. In order to print with this supply, you must press (Select) the first time you install this non-HP supply. The status gauges will not indicate when this type of supply is low or empty.

CAUTION The printer will not stop printing when this type of supply is empty. Printer damage could occur if the printer prints with an empty print cartridge. See Hewlett-Packard limited warranty statement on page 234 and Print Cartridge Limited Warranty Statement on page 235.

Download Service Manual And Resetter Printer at http://printer1.blogspot.com

HP anti-counterfeit website

Visit the HP anti-counterfeit website at http://www.hp.com/go/anticounterfeit if the supplies status gauges or HP ToolboxFX indicates that the print cartridge is not an HP print cartridge and you think that it is genuine.

Download Service Manual And Resetter Printer at http://printer1.blogspot.com

Cleaning the printer

During the printing process, paper, toner and dust particles can accumulate inside the printer. Over time, this buildup can cause print-quality problems such as toner specks or smearing. This printer has a cleaning mode that can correct and prevent these types of problems.

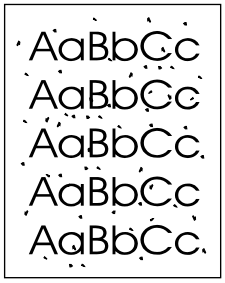

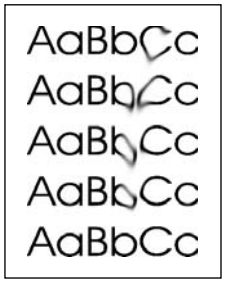

To remove toner build-up

During the printing process, toner can accumulate inside the printer. Over time, this buildup can cause print-quality problems. Each time you replace the black print cartridge, remove toner build-up.

1. Open the front door.

Download Service Manual And Resetter Printer at http://printer1.blogspot.com

2. Locate the blue cleaning tool that is situated to the left above the black print cartridge.

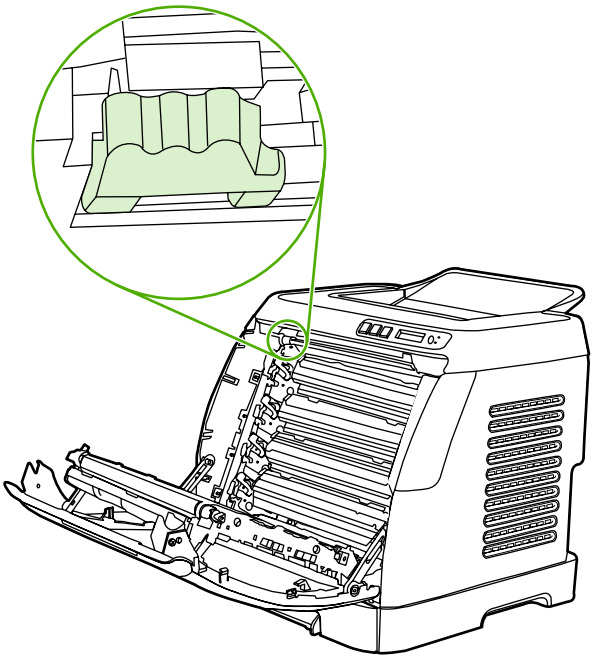

3. Move the cleaning tool back and forth across the cartridge five times.

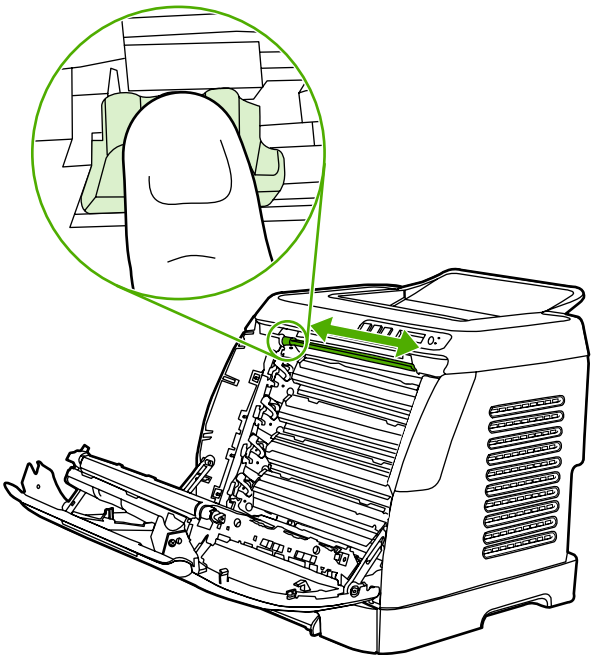

4. Ensure that the cleaning tool is returned to the left when the cleaning is finished.
5. Close the front door.
6. Run a cleaning page.

NOTE You will get toner on your hands when you perform this cleaning. To remove toner, wash your hands with cool water.

Download Service Manual And Resetter Printer at http://printer1.blogspot.com

To clean the paper path using HP ToolboxFX

NOTE Use the following procedure to clean the paper path using the HP ToolboxFX. To clean the engine when the computer is running an operating system that does not support HP ToolboxFX, see the late-breaking Readme on the root of the CD-ROM, or visit http://www.hp.com/support/clj2605.

1. Make sure that the printer is turned on and in the Ready state.
2. Open the HP ToolboxFX.
3. On the **Troubleshooting** tab, click **Maintenance**, click **Cleaning Page**, and then click **Print**. A page with a pattern prints from the printer.
4. At the printer, remove any print media in Tray 2 or optional Tray 3.
5. Remove the page that printed and load it face-down into Tray 2 or optional Tray 3.

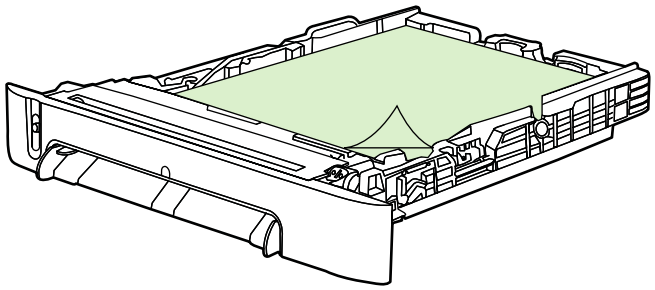

6. At the computer, press **Clean**.

Download Service Manual And Resetter Printer at http://printer1.blogspot.com

Cartridge out override

What is it?

The HP Color LaserJet 2605 Series printers display an **ORDER SUPPLIES** message when a cartridge is running low and a **REPLACE SUPPLIES** message when a cartridge has been depleted. To ensure optimal print quality, HP recommends replacing a cartridge when the **REPLACE SUPPLIES** message is displayed. Replacing the cartridge at this point can help prevent waste of media or other cartridges when one cartridge produces poor print quality.

The Cartridge Out Override feature allows the printer to continue using a cartridge that has reached the recommended replacement point.

WARNING! Using Override may result in unsatisfactory print quality and unavailability of certain features (such as toner remaining information).

WARNING! All print defects or supply failures incurred when an HP supply is used in Override will not be considered defects in materials or workmanship in the supply under HP's Print Cartridge Limited Warranty Statement. For Warranty information, see Print Cartridge Limited Warranty Statement on page 235.

Configuration

Cartridge Out Override can only be enabled from the printer's control panel menu.

1. From the main menu, press (Right arrow) to **SYSTEM SETUP** and press (Select).
2. Press (Right arrow) to **PRINT QUALITY** and press (Select).
3. Press (Right arrow) to **REPLACE SUPPLIES** and press (Select).
4. Press (Right arrow) to **OVERRIDE OUT** and press (Select).
5. Press (Select).

If **STOP AT OUT** is selected, the printer will stop printing when a cartridge reaches the recommended replacement point. If **OVERRIDE OUT** is selected, the printer will continue printing when a cartridge reaches the recommended replacement point. The factory default setting is **STOP AT OUT**.

On-going operation

Override can be enabled or disabled at any time, and does not have to be re-enabled for each cartridge. The printer will automatically continue printing when a cartridge reaches recommended replacement. The printer will display a message **Replace supplies Override in Use** while a cartridge is used in Override mode. When the cartridge is replaced with a new supply, Override will de-activate until another cartridge reaches recommended replacement.

Download Service Manual And Resetter Printer at http://printer1.blogspot.com

Calibrating the printer

The printer automatically calibrates at various times. You can adjust the calibration settings by using the HP ToolboxFX.

Environmental differences or aging print cartridges might cause fluctuations in image density. The printer accounts for this with image stabilization control. The printer automatically calibrates at various times to maintain the highest level of print quality. You can also request a calibration by using the HP ToolboxFX.

The printer does not interrupt a print job to calibrate. It waits until the job is complete before calibrating or cleaning. While the printer is calibrating, it pauses printing for the time that is required to complete the calibration.

To calibrate the printer at the printer

1. To calibrate from the printer, press (Left arrow) or (Right arrow) until the display reads **SYSTEM SETUP**.
2. Press (Select).
3. Press (Left arrow) or (Right arrow) until the display reads **PRINT QUALITY**.
4. Press (Select).
5. Press (Left arrow) or (Right arrow) until the display reads **CALIBRATE COLOR**.
6. Press (Select).
7. Press (Left arrow) or (Right arrow) until the display reads **CALIBRATE NOW**.
8. Press (Select).
9. Press (Select) to confirm **CALIBRATE NOW**.

To calibrate the printer from the HP ToolboxFX

1. Open the HP ToolboxFX in one of these ways:
   - On the desktop, double-click the **HP ToolboxFX** icon.
   - On the **Start** menu, point to **Programs**, point to **HP**, point to **HP Color LaserJet 2605 Series**, and click **HP ToolboxFX**.
2. Click the **Troubleshooting** tab and then click **Troubleshooting Tools** (on the left side of the screen).
3. In the Calibration section, click **CALIBRATE NOW**.

Download Service Manual And Resetter Printer at http://printer1.blogspot.com

Managing the printer

This printer comes with several software tools that help you monitor, troubleshoot problems with, and maintain the printer. Information about using these tools is in the following sections:

- Device pages and reports
- Menu map
- HP ToolboxFX
- Using the embedded Web server

Device pages and reports

Special pages reside within the memory of the printer. These pages help you to diagnose and solve problems with the printer.

If the printer language was not correctly set during installation, you can set the language manually so that the pages print in one of the supported languages. Change the language by using the HP ToolboxFX.

Demo page

To print the Demo page, press the (Left arrow) or (Right arrow) buttons on the printer control panel simultaneously. You can also print this page from the HP ToolboxFX.

Configuration page

The Configuration page lists current settings and properties of the printer. You can print a Configuration page from the printer or the HP ToolboxFX.

To print the Configuration page from the control panel

1. Press (Left arrow) or (Right arrow) to select the **Reports** menu.
2. Press (Select).
3. Press (Left arrow) or (Right arrow) to select **Config report**.
4. Press (Select) to print the Configuration Report page.

Download Service Manual And Resetter Printer at http://printer1.blogspot.com

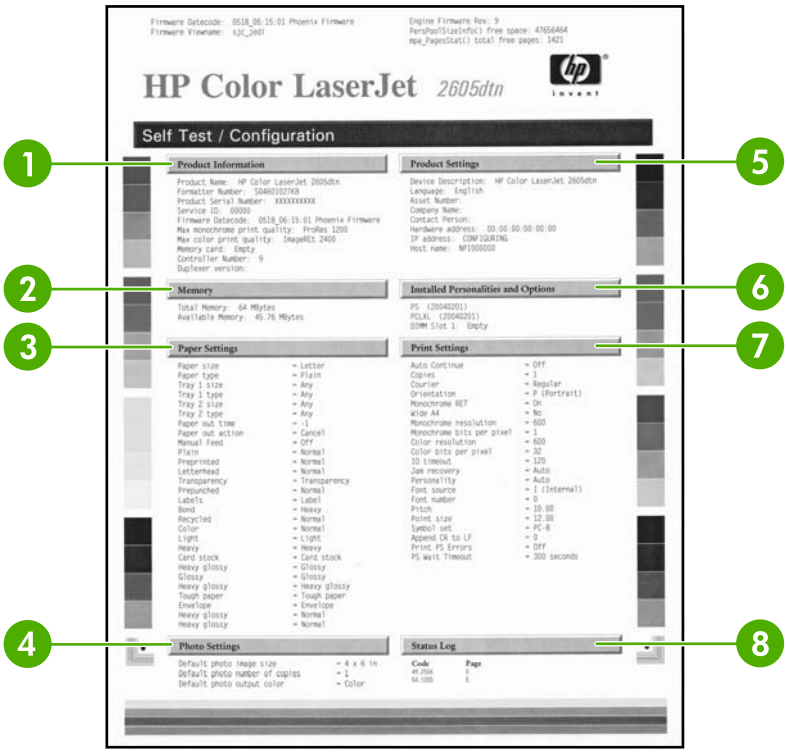

1. **Product Information**. This section contains basic information about the printer, such as the product name and the serial number.
2. **Memory**. This section lists memory-related information, such as the total memory that is installed.
3. **Paper Settings**. This section lists information about the media type for each tray and about the type settings for all the media that the printer supports.
4. **Page Counts**. This section lists the total number of pages printed, the number of color pages printed, and information about paper jams.
5. **Product Settings**. This section lists information that is gathered during software installation, including the language and the company name.
6. **Network Settings**. This section contains network information about the printer such as the Host Name, Hardware Address, and IP Address.
7. **Paper Types**. This section contains information about paper types that can be configured by the user.
8. **Status Log**. This section contains information about printer errors.

Supplies Status page

The Supplies Status page lists the remaining life of HP print cartridges. It also lists the estimated pages remaining, number of pages printed, and other supplies information. You can print a Supplies Status page from the printer or the HP ToolboxFX.

Download Service Manual And Resetter Printer at http://printer1.blogspot.com

To print the Supplies Status page from the control panel

1. Press (Left arrow) or (Right arrow) to select the **Reports** menu.
2. Press (Select).
3. Press (Left arrow) or (Right arrow) to select **Supplies Status**.
4. Press (Select) to print the Supplies Status page.

NOTE Supplies information is also available through the HP ToolboxFX.

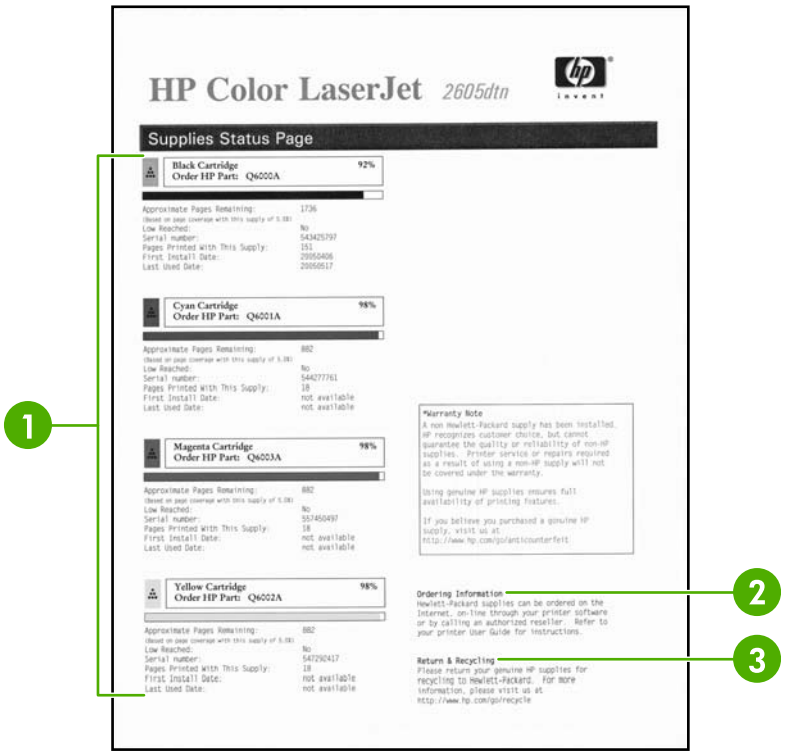

1. **Print cartridge area**. This area contains a section for each of the print cartridges and provides information about HP print cartridges. This information includes the part number for each print cartridge, whether each print cartridge is low, and the life remaining for each print cartridge, which is expressed as a percentage, as a graphic, and as the estimated number of pages remaining. This information might not be provided for non-HP supplies. In some cases, if a non-HP supply is installed, an alert message displays instead.
2. **Ordering Information**. This section contains basic information about how to order new HP supplies.
3. **Return & Recycling**. This section contains a link to the Web site that you can visit for information about recycling.

Download Service Manual And Resetter Printer at http://printer1.blogspot.com

Networking page

The Networking report option prints a Network configuration report. You can print this page using the printer control panel. Use the following steps to print the Network configuration report.

1. Press (Left arrow) or (Right arrow) to select the **Reports** menu.
2. Press (Select).
3. Press (Left arrow) or (Right arrow) to select **Network report**.
4. Press (Select) to print the Network configuration page.

Fonts pages

The fonts pages provide lists of the available fonts on the printer, including PostScript (PS) fonts, PCL fonts, and PCL6 fonts (PCLXL). You can print these font pages using the printer control panel. Use the following steps to print a fonts page.

1. Press (Left arrow) or (Right arrow) to select the **Reports** menu.
2. Press (Select).
3. Press (Left arrow) or (Right arrow) to select **PS font list**, **PCLXL font list**, or **PCL font list**.
4. Press (Select) to print the selected fonts page.

Usage page

The Usage Page provides information on the number and types of pages printed by the printer. You can print the usage page using the printer control panel. Use the following steps to print a usage page.

1. Press (Left arrow) or (Right arrow) to select the **Reports** menu.
2. Press (Select).
3. Press (Left arrow) or (Right arrow) to select **Usage page**.
4. Press (Select) to print the Usage Page.

Menu map

The menu map lists the menu structure for each option available on the printer control panel. Use the following steps to print a menu map.

To print a menu map

1. Press (Left arrow) or (Right arrow) to select the **Reports** menu.
2. Press (Select).
3. Press (Left arrow) or (Right arrow) to select **Menu structure**.
4. Press (Select) to print the Menu map.

Download Service Manual And Resetter Printer at http://printer1.blogspot.com

HP ToolboxFX

HP ToolboxFX is a Web-based program that you can use to complete the following tasks:

- Check the printer status.
- Configure the printer settings.
- View troubleshooting information.
- View online documentation.

You can view HP ToolboxFX when the printer is directly connected to your computer or when it is connected to the network. You must perform a typical software installation to use HP ToolboxFX.

NOTE HP ToolboxFX is not supported for Windows 98 SE, Windows Me, Windows Server 2003, or Macintosh operating systems.

NOTE You do not have to have Internet access to open and use HP ToolboxFX.

To view HP ToolboxFX

Open HP ToolboxFX in one of these ways:

- In the Windows system tray or on your desktop, double-click the HP ToolboxFX icon.
- On the Windows **Start** menu, click **Programs** (or **All Programs** in Windows XP), click **HP**, click **HP Color LaserJet 2605 Series** , and then click **HP ToolboxFX**.

The HP ToolboxFX software contains the following sections:

- Status on page 45
- Alerts on page 46
- Help on page 46
- Device settings on page 47
- Network settings on page 51

Download Service Manual And Resetter Printer at http://printer1.blogspot.com

Status

The HP ToolboxFX **Status** folder contains links to the following main pages:

- **Device Status**. View printer status information. This page indicates printer conditions such as a jam or an empty tray. After you correct a problem with the printer, click **Refresh** button to update the printer status.
- **Supplies Status**. View detailed supplies status such as the estimated percent of toner remaining in the print cartridge and the number of pages that have been printed with the current print cartridge. This page also has links to order supplies and to find recycling information.
- **Device Configuration**. View a detailed description of the current printer configuration, including the amount of memory installed and whether optional trays are installed.
- **Network Configuration**. View a detailed description of the current network configuration, including the IP address and network status.
- **Print Info Pages**. Print the Configuration page and various other information pages that are available for the printer, such as the Supplies Status page and the Demo page.
- **Event Log**. View a history of printer errors. The most recent error is at the top of the list.

Event log

The Event log is a four-column table where the printer events are logged for your reference. The log contains codes that correspond to the error messages that appears on the printer control-panel display. The number in the Page Count column specifies the total number of pages that the printer had printed when the error occurred. The Event log also contains a brief description of the error. For more information about error messages, see Control-panel messages on page 136.

Download Service Manual And Resetter Printer at http://printer1.blogspot.com

Alerts

The HP ToolboxFX **Alerts** folder contains links to the following main pages:

- **Set up Status Alerts**. Set up the printer to send you pop-up alerts for certain events, such as low toner levels.
- **Set up E-mail Alerts**. Set up the printer to send you e-mail alert messages for certain events, such as low toner levels.

Set up status alerts

Use HP ToolboxFX to set up the printer so that it issues pop-up alerts to your computer when certain events occur. Events that trigger alerts include jams, low levels of toner in HP print cartridges, non-HP print cartridge in use, empty input trays, and specific error messages.

Select the pop-up format, the system tray icon format, the desktop format, or all three for the alerts. The pop-up alerts only appear when the printer is printing from the computer on which you set up the alerts.

NOTE You must click **Apply** before your changes take effect.

Set up e-mail alerts

Use HP ToolboxFX to configure up to two e-mail addresses to receive alerts when certain events occur. You can specify different events for each e-mail address. Enter the information for the e-mail server that will send out the e-mail alert messages for the printer.

NOTE You must click **Apply** before your changes take effect.

Help

The HP ToolboxFX **Help** folder contains links to the following main pages:

- **Troubleshooting**. Print troubleshooting pages, clean the printer, and display Microsoft Office Basic Colors. For more information on Microsoft Office Basic colors, see the *HP Color LaserJet 2605, 2605dn, 2605dtn User Guide*.
- **How Do I?** View the How Do I? Help for help with specific tasks.
- **Animated demonstrations**
- **User Guide**. View information about the printer usage, warranty, specifications, and support. The user guide is available in both HTML and PDF format.
- **Readme**. View important information about the printer that is not available in the user guide. The late-breaking Readme contain last-minute information about the printer (in English only).

Download Service Manual And Resetter Printer at http://printer1.blogspot.com

Device settings

The HP ToolboxFX **Device Settings** folder contains links to the following main pages:

- **Device Information**. View information about the printer, such as the printer description and a contact person.
- **Paper handling**. Change the printer paper-handling settings, such as default paper size and default paper type.
- **Printing**. Change the default printer print settings, such as number of copies and paper orientation.
- **PCL5e**. View and change the PCL5e settings.
- **PostScript**. View and change the PS settings.
- **Print quality**. Change the printer print-quality settings.
- **Print density**. Change the print density settings, such as contrast, highlights, midtones, and shadows.
- **Paper types**. Change the printer mode settings for a each media type, such as letterhead, prepunched, or glossy paper.
- **Memory Card**. Change the printer settings, such as image size, number of copies, and output color when printing photos using memory cards.
- **System Setup**. Change the printer system settings, such as printer language and jam recovery.
- **Service**. Gain access to various procedures required to maintain the printer.
- **Save/restore settings**. Save the current settings for the printer to a file on your computer. Use this file to load the same settings onto another printer or to restore these settings to this printer at a later time.

Device information

The information that you type in these fields appears on the Configuration page. You can type any character in each of these fields.

NOTE You must click **Apply** before your changes take effect.

Download Service Manual And Resetter Printer at http://printer1.blogspot.com

Paper handling

Use the HP ToolboxFX paper-handling options to configure your default settings. These are the same options that are available on the **SYSTEM SETUP** and **Paper setup** menus on the control panel. For more information, see Control panel menus on page 30.

Three options are available for handling print jobs when the product is out of media:

- Select **Wait For Paper To Be Loaded**.
- Select **Cancel** from the **Paper out action** drop-down list to cancel the print job.
- Select **Override** from the **Paper out time** drop-down list to send the print job to another paper tray.

The **Paper out time** field specifies how long the printer waits before acting on your selections. You can specify from 0 to 3600 seconds.

NOTE You must click **Apply** before your changes take effect.

Printing

Use the HP ToolboxFX printing settings options to configure the settings for all print functions. These are the same options that are available on the **Print Settings** menu on the control panel. For more information, see Control panel menus on page 30.

NOTE You must click **Apply** before your changes take effect.

PCL5e

Use the PCL5e options to configure the settings when you are using the PCL5e print personality. These are the same options that are available on the **PCL5e** menu on the control panel.

NOTE You must click **Apply** before your changes take effect.

Download Service Manual And Resetter Printer at http://printer1.blogspot.com

PostScript

Use the PostScript option when you are using the PostScript print personality. When the **Print PostScript error** option is turned on, the PostScript error page automatically prints when PostScript errors occur.

NOTE You must click **Apply** before your changes take effect.

Print quality

Use the HP ToolboxFX print-quality options to improve the appearance of your print jobs. These are the same options that are available on the **SYSTEM SETUP** and **PRINT QUALITY** menu on the control panel. For more information, see Control panel menus on page 30.

- For Color Calibration, the following options are available:
  - Power On Calibration
  - Calibration Timing
  - Calibrate Now
- For Grayscale Printing, the following options are available:
  - **Resolution**. Select 600 resolution for average print jobs and Fast Res 1200 for higher-quality print jobs. Select ProRes 1200 for the highest-quality print job, but a longer printing time.
  - **REt**. You can turn on REt, which HP provides for improved print quality.
  - **Economode**. Turn Economode on when you are printing average print jobs. Economode reduces print quality, but increases the life of your print cartridge. To increase print quality, turn Economode off. HP does not recommend full-time use of Economode.

NOTE You must click **Apply** before your changes take effect.

Print density

The print density settings allow you to make fine adjustments of the density (amount) of cyan, magenta, yellow, and black toner in your images, pages, and documents.

- **Contrasts**. Contrast is the density difference between light (highlight) and dark (shadow) colors. To increase the difference between light and dark colors (equivalent to a negative highlight adjustment and a positive shadow adjustment), use a positive contrast setting. To decrease the difference between light and dark colors (equivalent to a positive highlight adjustment and a negative shadow adjustment), use a negative contrast setting.
- **Highlights**. Highlight colors are colors near white. To make highlight colors darker, use a positive highlight setting, and to make highlight colors lighter use a negative highlight setting. This adjustment does not affect midtone or shadow colors.

Download Service Manual And Resetter Printer at http://printer1.blogspot.com

- **Midtones**. Midtone colors are about halfway between white and solid density. To make midtone colors darker, use a positive midtone setting, and to make midtone colors lighter use a negative highlight setting. This adjustment does not affect highlight or shadow colors.
- **Shadows** Shadow colors are colors near solid density. To make shadow colors darker, use a positive shadow setting, and to make shadow colors lighter use a negative shadow setting. This adjustment does not affect highlight or midtone colors.

Paper types

Use these HP ToolboxFX **Paper types** options to configure print modes that correspond to the various media types. When you select **Restore Modes**, all of the modes are reset to the factory settings.

NOTE You must click **Apply** before your changes take effect.

Memory card (HP Color LaserJet 2605dtn)

Use the HP ToolboxFX memory card options to configure print settings when using memory cards.

Three options are available for configuring the printer when using memory cards.

- **Photo image size**. Select the size photos to print from the drop-down list.
- **Photo number of copies**. Type the number of copies from 0 to 99 to print for each image.
- **Photo output color**. Select either **Color** or **Monochrome** from the drop-down list.

Select the **Enable memory cards** check box to save the settings.

Download Service Manual And Resetter Printer at http://printer1.blogspot.com

System setup

Use the HP ToolboxFX system settings options to configure miscellaneous print settings. These settings are not available from the printer control panel.

NOTE You must click **Apply** before your changes take effect.

Service

During the printing process, paper, toner, and dust particles can accumulate inside the printer. Over time, this buildup can cause print-quality problems such as toner specks or smearing. HP ToolboxFX provides an easy method for cleaning the paper path. For more information, see To clean the paper path using HP ToolboxFX on page 37.

Network settings

The network administrator can use the HP ToolboxFX **Network Settings** folder to control the network-related settings for the printer when it is connected to an IP-based network.

The following options are available:

- IP Configuration
- Advanced
- SNMP
- Network Configuration
- Password

Using the embedded Web server

When the printer is directly connected to a computer, use the HP ToolboxFX to view Web pages for the printer status.

When the printer is connected to the network, the embedded Web server is automatically available. You may access the embedded Web server from any supported browser.

The embedded Web server allows you to view printer and network status and to manage printing functions from your computer instead of using the printer control panel. Below are examples of what you can do using the embedded Web server:

- View printer status information.
- Set the type of paper loaded in each tray.
- Determine the remaining life on all supplies and order new ones.
- View and change tray configurations.
- View and change the printer.
- View and print internal information pages.
- View and change network configuration.

Download Service Manual And Resetter Printer at http://printer1.blogspot.com

The embedded Web server supports the following browsers:

- Microsoft Internet Explorer 6.0 and later
- Netscape 7.0 or later
- Opera 7.0 or later
- Firefox 1.0 or later
- Mozilla 1.6 or later
- Safari 1.2 or later

The embedded Web server works when the printer is connected to an IP-based network. The embedded Web server does not support IPX-based or AppleTalk printer connections. You do not need Internet access to open and use the embedded Web server.

To access the embedded Web server using a network connection

In a supported Web browser on your computer, type the IP address for the printer in the address/URL field. (To find the IP address, print a configuration page. For more information about printing a configuration page, see Configuration page on page 40.)

NOTE If you are unable to access the embedded Web server using the IP address, you can use the host name.

NOTE After you open the URL, you can bookmark it so that you can return to it quickly in the future.

1. The embedded Web server has three tabs that contain settings and information about the printer: the **Information** tab, the **Settings** tab, and the **Networking** tab. Click the tab that you want to view.
2. See the following sections for more information about each tab.

Information tab

The **Information** pages group consists of the following pages.

- **Device Status.** This page displays the printer status and shows the life remaining of HP supplies, with 0% indicating that a supply is empty. The page also shows the type and size of print media set for each tray.
- **Configuration.** This page displays the network and product information found on the printer Configuration page, such as page counts, print settings, and paper options.
- **Supplies Status.** This page displays the life remaining of HP supplies, with 0% indicating that a supply is empty. This page also provides supplies part numbers. To order new supplies, click **Order Supplies** in the **Other Links** area on the left side of the window. To visit any Web site, you must have Internet access.
- **Print Info Pages**. This page provides a remote way to print an internal page for a printer.

Download Service Manual And Resetter Printer at http://printer1.blogspot.com

Settings tab

This tab allows you to configure the printer from your computer. The **Settings** tab can be password protected. If this printer is networked, always consult with the printer administrator before changing settings on this tab.

The **Settings** tab contains the following pages.

- **Paper Handling**. Configure paper handling settings from this page.
- **Printing**. Configure the IO Timeout from this page.
- **Print Quality**. Use this page to configure color calibration and optimize settings.
- **Print Density**. Use this page to configure print density settings including contrast, highlights, midtones, and shadows.
- **Paper Type Settings**. Use this page to configure paper types
- **Print Modes**. Use this page to configure print mode settings.
- **System Setup**. Use this page to set up system settings, including jam recovery, auto continue, display contrast, and printer language.
- **Service**. Use this page to start the cleaning mode and restore factory settings.

Networking tab

This tab allows the network administrator to control network-related settings for the printer when it is connected to an IP-based network.

- **IP Configuration**. Use this page to set the IP configuration.
- **Advanced**. Use this page to enable network features such as SLP Config, DHCP, BootP, and AutoIP.
- **mDNS**. Use this page to set the mDNS. Use these settings to turn on or off Rendezvous or Bonjour discovery.
- **SNMP**. Use this page to set SNMP protocols.
- **Password**. Use this page to set or change the Administrator Password.

Other links in HP ToolboxFX

This section contains links that connect you to the Internet. You must have Internet access in order to use any of these links. If you use a dial-up connection and did not connect when you first opened the embedded Web server, you must connect before you can visit these Web sites. Connecting might require that you close the embedded Web server and reopen it.

- **HP Instant Support™.** Connects you to the HP Web site to help you find solutions. This service analyzes your printer error log and configuration information to provide diagnostic and support information specific to your printer.
- **Product Registration**. Click this link to connect to the HP Web site to register the product.

Download Service Manual And Resetter Printer at http://printer1.blogspot.com

- **Order Supplies.** Click this link to connect to the HP Web site and order genuine HP supplies, such as print cartridges and paper.
- **Product Support.** Connects to the support site for the HP Color LaserJet 2605 Series printers where you can search for help regarding general topics.

Download Service Manual And Resetter Printer at http://printer1.blogspot.com

4 Operational theory

This chapter contains information about the following topics:

- Engine control system
- Image formation system
- Pickup and feed system
- Service-only tools (SERVICE ONLY)

Download Service Manual And Resetter Printer at http://printer1.blogspot.com

Engine control system

Basic sequence of operation

The operational sequence of the printer is controlled by the microcomputer on the DC controller printed circuit assembly (PCA). The purposes of each period, from power-on until the main motor stops after the completion of printing, are listed below. See General timing chart on page 80 for a detailed timing chart.

Table 4-1 Basic operational sequence

	Period	Purpose	Remarks
WAIT (wait period)	From power-on until the end of the main motor initial drive.	To clear the drum surface potential and to clean the ETB.	Detects whether or not the print cartridge is installed.
STBY (standby period)	From the end of WAIT or LSTR until the input of print command from the formatter. Or, from the end of LSTR until power-off.	To keep the printer ready to print.	
INTR (initial rotation period)	From the input of print command from the formatter until the pick-up solenoid is turned on.	To stablize the photosensitive drum sensitivity for print preparation.	
PRINT (print period)	From the end of INTR until the developing high-voltage is off.	To form the image on the photosensitive drum based on the VIDEO signals input from the formatter, and to transfer the toner image onto paper.	
LSTR (last rotation period	From the developing high-voltage off until the main motor stops rotating.	To deliver the last page completely. Also used to clean the ETB.	The printer enters INTR after the end of LSTR, when the print command is input from the formatter.

The engine control system coordinates all printer functions. It drives the laser/scanner system, the image formation system, and the pickup and feed system. The engine control system contains the following components:

- DC controller PCA
- Low-voltage power supply unit
- High-voltage power supply PCA

Download Service Manual And Resetter Printer at http://printer1.blogspot.com

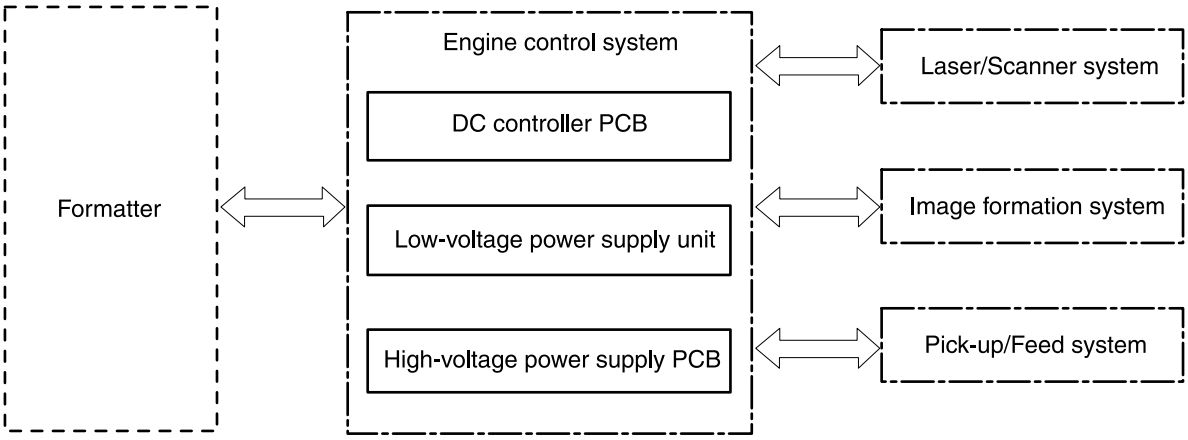

Figure 4-1 Engine control system

Power-on sequence

The power-on sequence is for the purpose of the printer initialization and checking for possible malfunctions.

The following is the sequence from when the printer is turned on until it enters STBY mode.

1. Power on
2. Central processing unit (CPU) initialization
3. ASIC initialization
4. Video interface communication start
5. Residual paper check by each sensor signaling paper presence
6. Initial drive for main motor, pickup motor, and fuser/delivery motor
7. Fuser heater initial drive by controlling fuser temperature targeting for 100°?C
8. Initial drive for scanner motor
9. Failure/Abnormality check
    - Detect scanner failure
    - Fuser failure
    - Door open during the above periods
10. Communication with memory tag
11. Cartridge presence detection

Motors and fans

The DC controller PCA controls four motors.

Download Service Manual And Resetter Printer at http://printer1.blogspot.com

The specifications of each motor are listed in the following table.

Table 4-2 Motor specifications

Name		Purpose	Type	Direction of rotation	Failure detection
Motor	Main motor (M1)	Drive ETB belt, photosensitive drum and developing cylinder	DC motor	CW	Yes
	Fuser/delivery motor (M2)	Drive fuser pressure roller, delivery roller and automatic release of fuser pressure	Stepping motor	CW/CCW	No
	Pickup motor (M3)	Drive pickup roller and registration roller	Stepping motor	CW	No
	Fan (FM1)	Circulate air around cartridge	DC motor	—	Yes

Main motor failure detection

The CPU determines the main motor failure, stops the printer, and notifies the formatter of error status, when it encounters the following conditions.

- Main motor start-up abnormality

  The interval of the MAIN MOTOR SPEED DETECTION signal (/MAINMFG) does not become the specified interval after 1000 ms of the main motor drive start.

- Main motor rotation abnormality

  The interval of the /MAINMFG signal stays at an irregular interval for 100 ms and longer after once it has become the specified interval.

Fan motor failure detection

The CPU determines the fan motor failure and notifies the formatter when it encounters the following condition.

The FAN LOCK signal (FANLCK) is “H” for approximately 10 seconds and longer during fan motor rotation.

Download Service Manual And Resetter Printer at http://printer1.blogspot.com

Image formation system

The image formation system serves as the nerve center of the printer and forms a toner image on paper. It is controlled by the DC controller. The DC controller controls the laser/scanner unit and the high-voltage power supply PCA to form an image on paper according to the VIDEO signals (VDO, /VDO) upon reception of a print command from the formatter. There is a memory tag inside each cartridge. The memory tags read and write data according to the command from the DC controller.

The following figure illustrates the image formation system.

Download Service Manual And Resetter Printer at http://printer1.blogspot.com

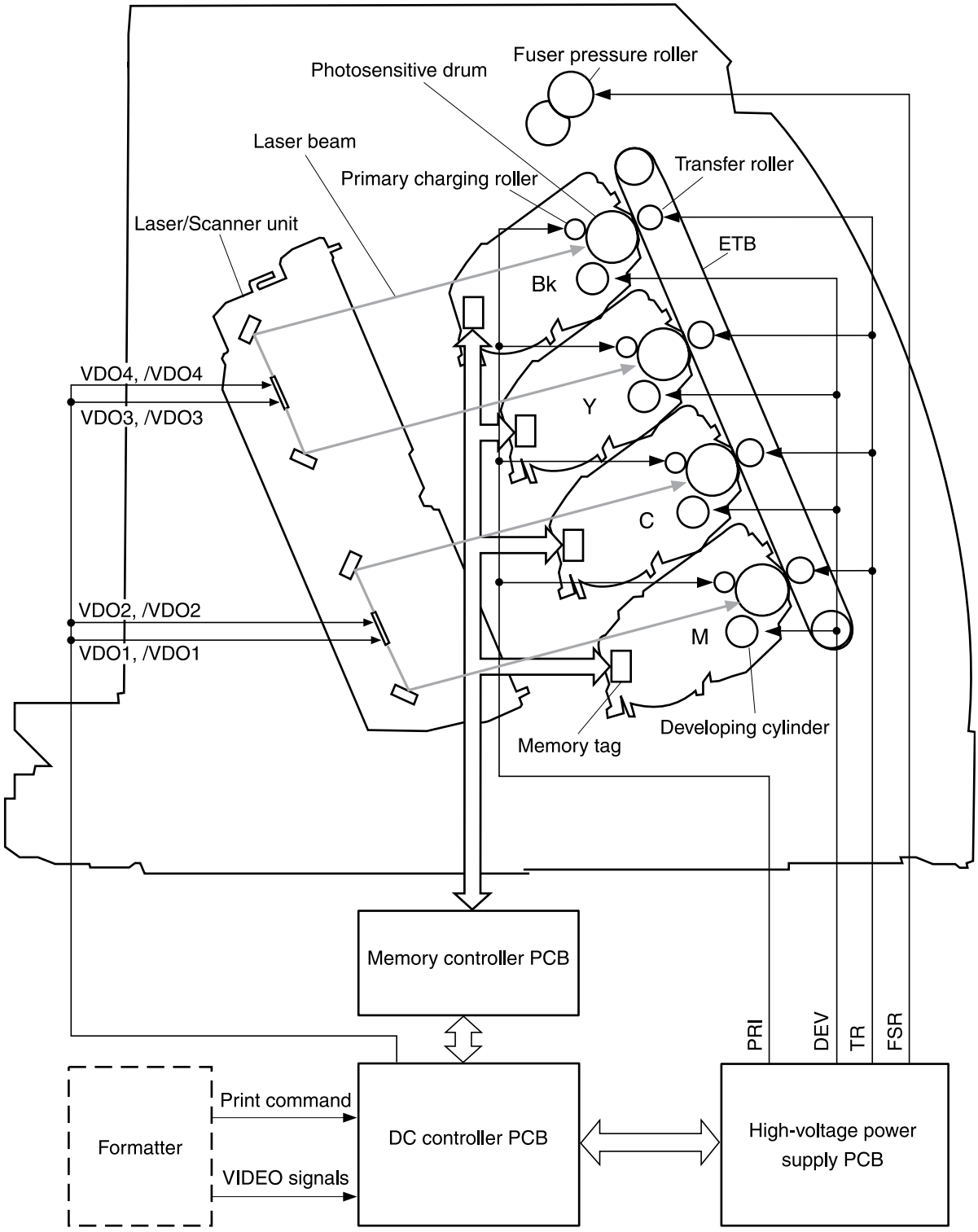

Figure 4-2 Image formation system

Download Service Manual And Resetter Printer at http://printer1.blogspot.com

Image formation process

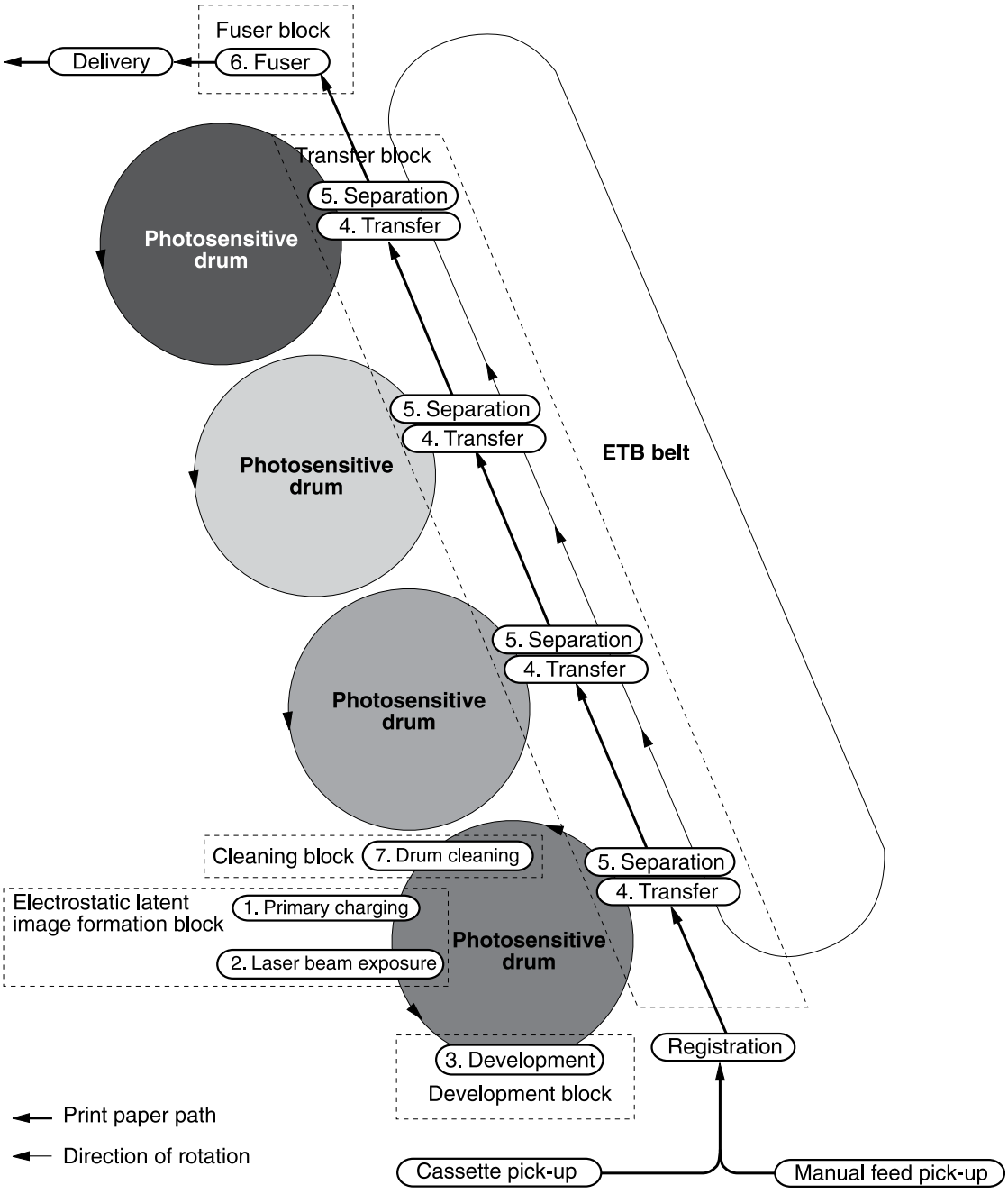

Figure 4-3 Image formation process

Download Service Manual And Resetter Printer at http://printer1.blogspot.com

The principal process of image formation is described here. The print process can be broadly divided into five stages with seven steps. A toner image is formed on paper as it goes through each process. The following figure illustrates the stages and steps of the print process as follows.

1. **Electrostatic latent image formation stage**

   Forms an electrostatic latent image on the photosensitive drum.

   Step 1: Primary charging

   Step 2: Laser beam exposure

2. **Developing stage**

   Makes the electrostatic latent image on the photosensitive drum surface visible by applying toner.

   Step 3: Development

3. **Transfer stage**

   Transfers a toner image on the photosensitive drum onto paper.

   Step 4: Transfer

   Step 5: Separation

4. **Fuser stage**

   Fuses the toner image on paper.

   Step 6: Fuser

5. **ETB cleaning stage**

   Cleans the residual toner on the photosensitive drum.

   Step 7: ETB cleaning

Latent image formation

This stage consists of two steps and forms an electrostatic latent image on the photosensitive drum.

When the last step in this stage is completed, a negative electrical charge remains in the unexposed drum surface area by the laser beam and is removed from the exposed area. The image with negative charge on the drum is called an “electrostatic latent image”, and it is invisible to the human eye.

Download Service Manual And Resetter Printer at http://printer1.blogspot.com

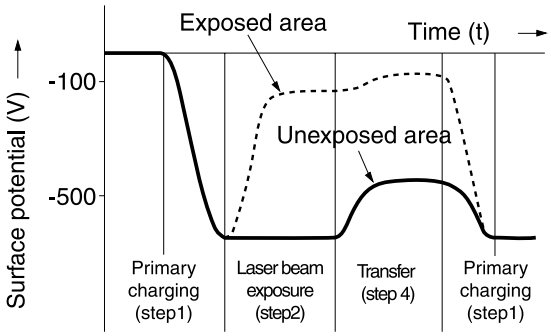

Figure 4-4 Latent image formation

Laser/scanner system

The laser/scanner system forms latent images on the photosensitive drum according to the VIDEO signals sent from the formatter. It consists of the laser driver PCA, the scanner motor, and so forth. The figure below illustrates the laser/scanner unit.

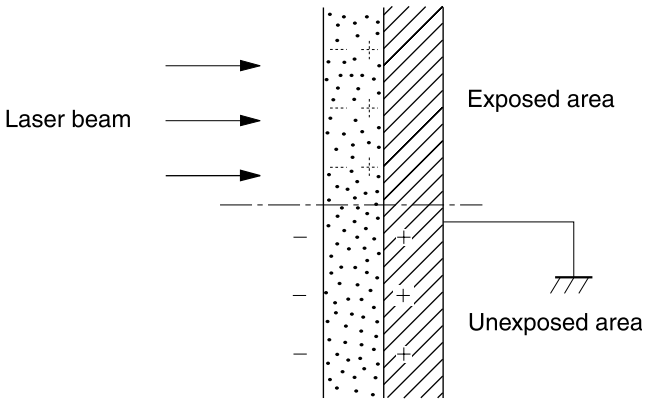

Figure 4-5 Laser beam exposure

Developing stage

The electrostatic latent image on the photosensitive drum surface is visualized by applying the toner in this process. This printer utilizes the projection development method by the non-magnetic, single-component toner.

Download Service Manual And Resetter Printer at http://printer1.blogspot.com

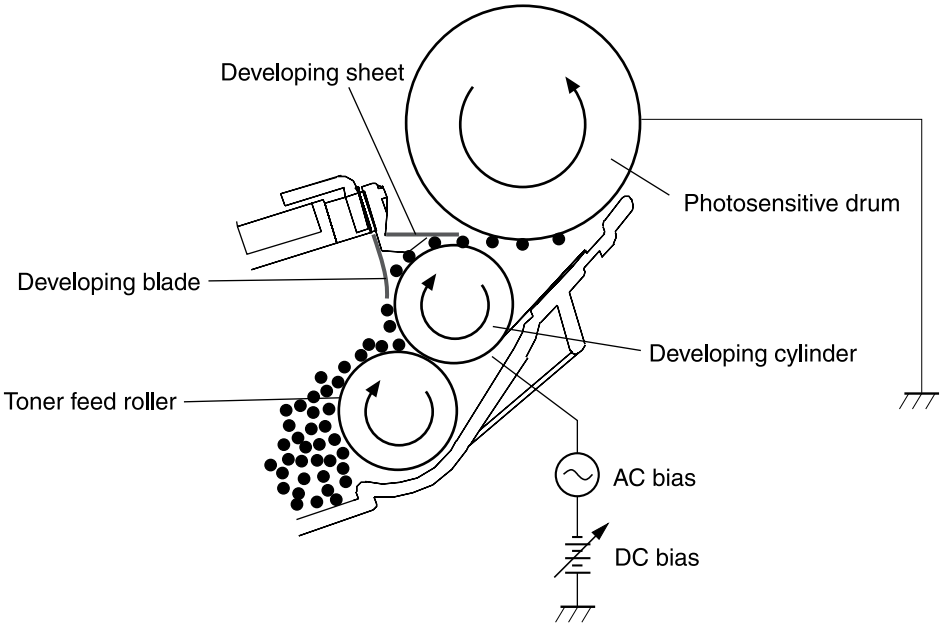

Figure 4-6 Developing stage

The toner has an insulating property and has negative charge potential from friction with the rotating developing cylinder and the developing blade surface.

The area of the photosensitive drum, where the laser beam is exposed, has higher potential than the toner, which is charged negatively on the cylinder. When this area contacts the toner layer (negatively charged), the toner jumps onto the drum surface by the potential difference between the drum surface and the cylinder (higher potential on drum side). This is called the projection development and it visualizes the electrostatic latent image on the drum. The developing cylinder is applied the AC bias in order to make the toner jump easier onto the drum surface and improve the contrast of the output image.

This printer is able to adjust the image density by changing the potential difference between the cylinder and the photosensitive drum surface according to changes of the developing DC bias based on the IMAGE DENSITY INFORMATION signal sent from the formatter.

The developing sheet improves the print quality and also prevents toner from scattering.

Print cartridge

The cartridge forms a visible toner image on the photosensitive drum. There are four print cartridges: magenta (M), cyan (C), yellow (Y), and black (K).

Download Service Manual And Resetter Printer at http://printer1.blogspot.com

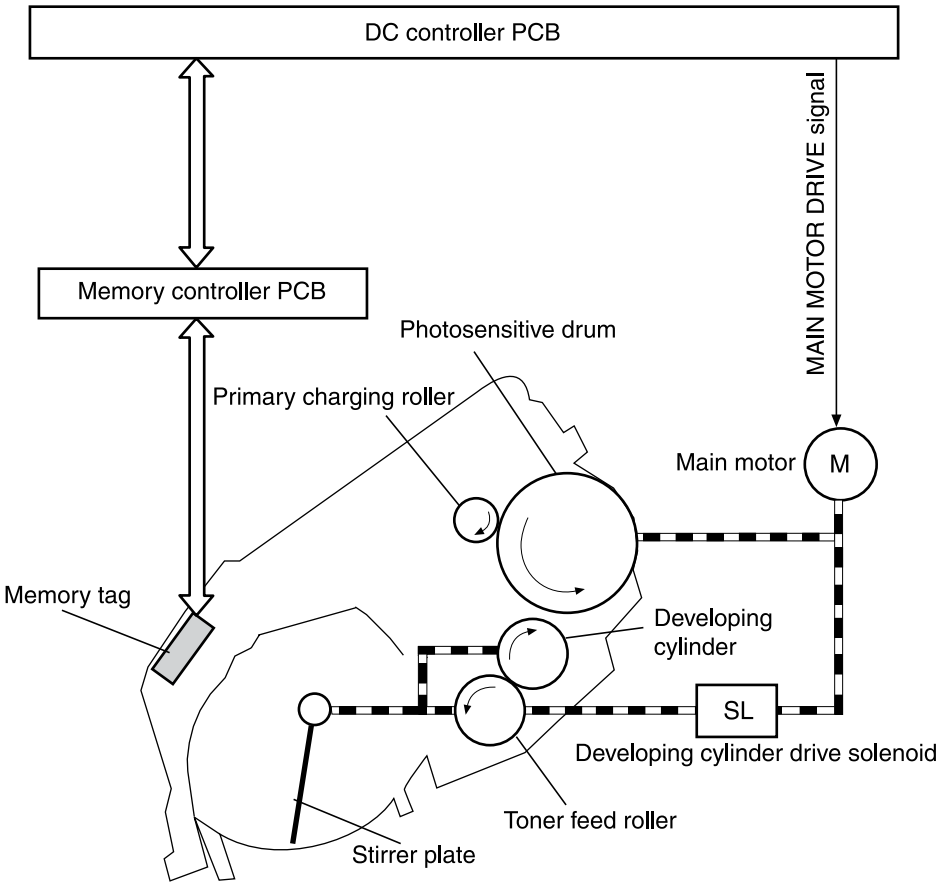

Figure 4-7 Print cartridge structure

Transfer belt (ETB)

The ETB unit feeds paper as well as transfers toner onto the paper.

The ETB unit consists of the ETB, ETB feed roller, ETB driven roller, and color misregistration/ density sensor unit.

As the main motor rotates the ETB feed roller, the ETB feed roller rotates the ETB belt. The transfer roller and the ETB driven roller are engaged with the ETB.

During printing, the picked up paper is conveyed in between the ETB and the photosensitive drum, and simultaneously the toner image is transferred onto the paper. The ETB is also used for color misregistration corrective control and the image stabilization control. The pattern image for the color misregistration or image density determination is transferred onto the belt. This pattern image is read in the color misregistration/density sensor unit.

The following is the diagrammatic sketch of the ETB unit.

Download Service Manual And Resetter Printer at http://printer1.blogspot.com

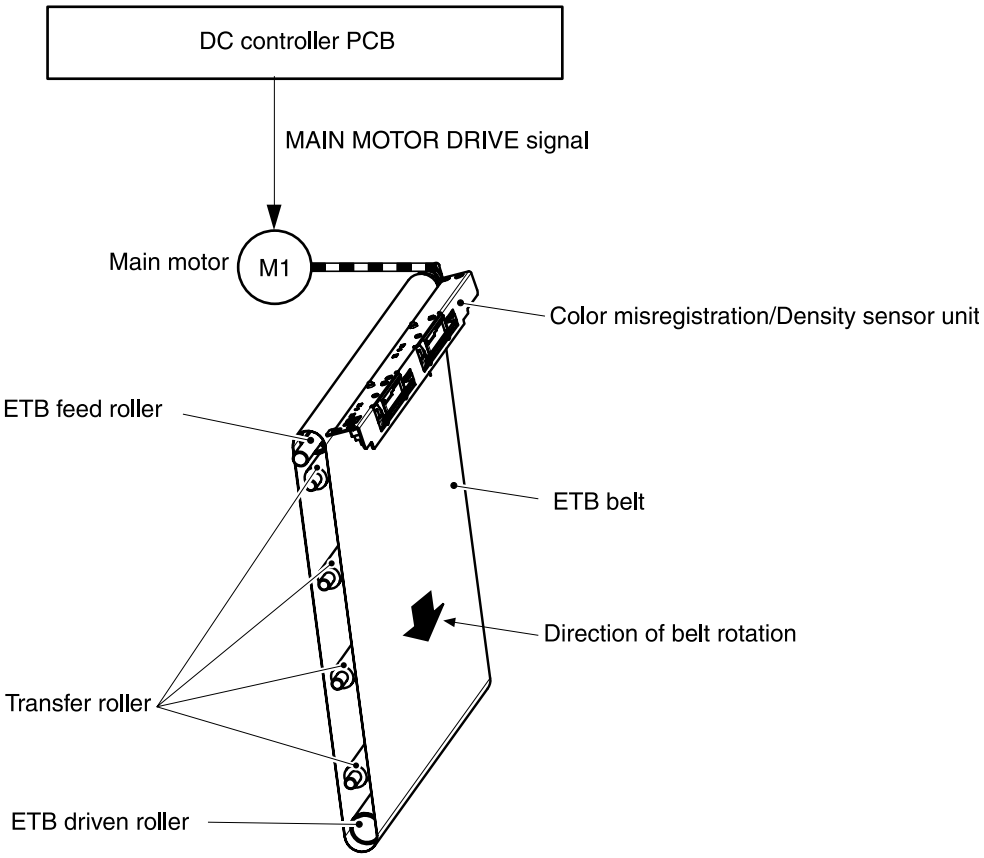

Figure 4-8 ETB unit

Transfer stage

The transfer stage is to transfer the toner image on the photosensitive drum surface onto paper.

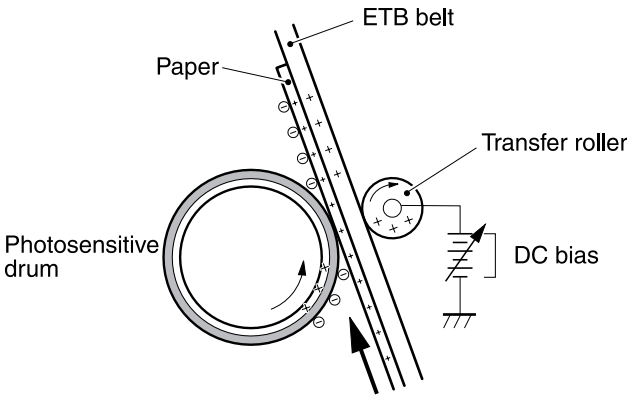

Figure 4-9 Transfer stage

Download Service Manual And Resetter Printer at http://printer1.blogspot.com

The toner on the photosensitive drum surface is transferred onto the paper according to the positive charge from the back side of the paper. Each color's toner image is transferred in order of M, C, Y, and K, and forms one toner image overlaying one color's image on another.

Separation stage

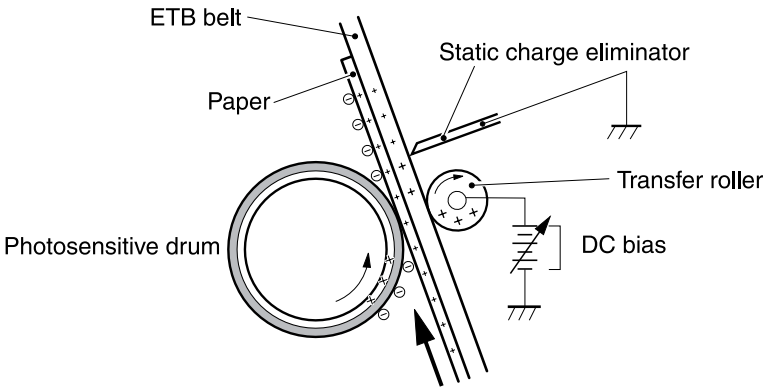

Figure 4-10 Separation stage

The paper is separated from the drum by its elasticity (Curvature Separation). The static charge on the back side of the paper is decreased with the electrostatic eliminator in order to stablize the feeding operation and prevent the crescent spots of printing image under the low temperature and low humidity environment.

Fusing stage

The toner image transferred onto the paper through the transfer stage can be smeared easily because it is only attracted to the paper by the static electricity. In the fusing stage, the printer used heat and pressure to make the image permanent.

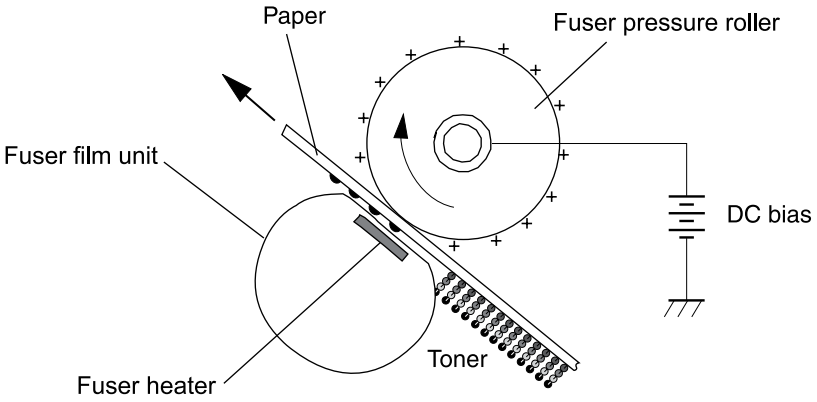

Figure 4-11 Fusing stage

The toner image is fused onto the paper by using the on-demand fuser method in this step. This printer utilizes the ceramic heater with lower heat capacity, which warms up quickly, does not require the power supply during STBY mode, and saves energy. The printer applies the DC positive bias to

Download Service Manual And Resetter Printer at http://printer1.blogspot.com

the fuser pressure roller so that the transferred toner stays on the paper and toner scattering (offset) is prevented.

Download Service Manual And Resetter Printer at http://printer1.blogspot.com

Pickup and feed system

The pickup and feed system, which picks up and feeds paper, consists of the various feed rollers. This printer has two pickup sources: the cassette and the single-sheet priority feed slot, and one delivery source: the face-down tray. The following components are part of the pickup and feed system:

- Manual feed slot paper sensor (SR3): detects the presence of paper in the single-sheet priority feed slot
- Cassette paper sensor (SR2): detects the presence of paper in the cassette
- DC controller controls the following to drive each feed roller:
  - Main motor (M1)
  - Fuser/delivery motor (M2)
  - Pickup motor (M3)
  - Solenoid (SL1)
  - Solenoid (SL2)
  - Solenoid (SL3)
- Photo sensors:
  - SR1, SR4, and SR5 on the paper transport path detect the arrival and passage of paper
  - SR9 detects the fuser pressure roller alienation in the fuser
  - SR8 detects the paper width

The figure below illustrates the motors, solenoids, and sensors.

NOTE There is a short pause before the paper is picked up.

Download Service Manual And Resetter Printer at http://printer1.blogspot.com

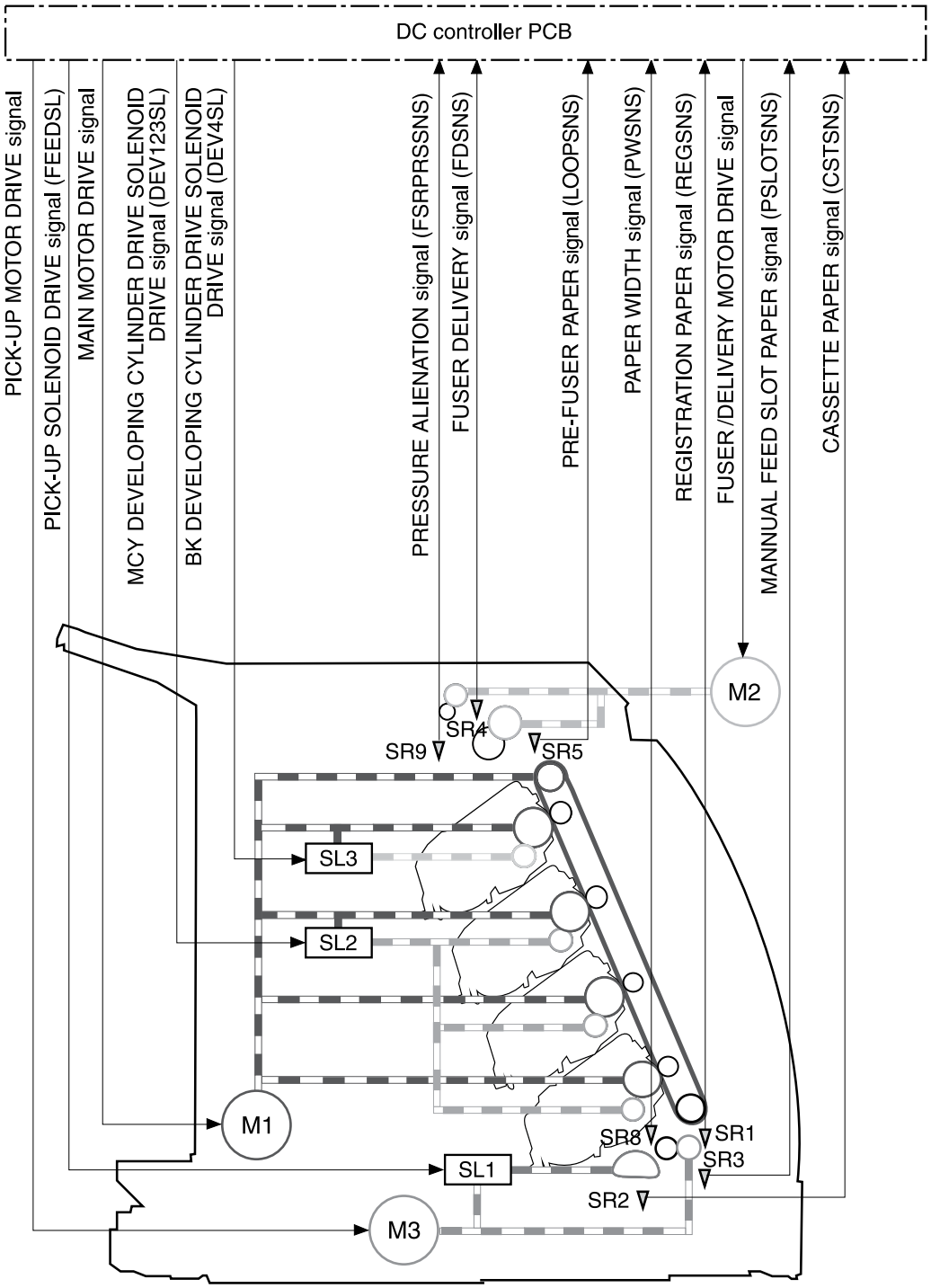

Figure 4-12 Paper pickup and feed system

SR1	Registration paper sensor
SR2	Cassette paper sensor
SR3	Manual feed slot paper sensor

Download Service Manual And Resetter Printer at http://printer1.blogspot.com

SR4	Fuser delivery paper sensor
SR5	Pre-fuser paper sensor
SR8	Paper width sensor
SR9	Pressure alienation sensor
M1	Main motor
M2	Fuser/Delivery motor
M3	Pickup motor
SL1	Cassette pickup solenoid
SL2	Magenta, cyan, and yellow developing cylinder drive solenoid
SL3	Black developing cylinder drive solenoid

Manual feed slot pickup mechanism

This mechanism picks up one sheet of paper only that is inserted into the single-sheet priority feed slot and then into the printer. This printer does not have a pickup roller in the single-sheet priority feed slot. Instead of a pickup roller, the registration roller picks up paper. The presence of paper in the single-sheet priority feed slot is detected by the single-sheet priority feed slot paper sensor (SR3). The following is the operational sequence of the single-sheet priority feed slot pickup.

1. If paper is set into the single-sheet priority feed slot during STBY mode, the single-sheet priority feed slot paper sensor (SR3) detects it.
2. When the paper is detected, the DC controller drives the pickup motor (M3) for 5 seconds. The paper is fed approximately 5 mm (0.2 inch) and is then caught by the registration roller.
3. After the above operational sequence, the paper is fed by the drive of the registration roller.

Paper feed mechanism

This mechanism feeds one sheet of picked up paper to the fuser. There is a paper width sensor in the paper transport path to prevent temperature rise at the end of the fuser. It detects paper with widths of shorter than 190 mm (7.5 inches). The following is the operational sequence of paper feed.

1. Paper skew is corrected by the registration shutter when the paper is fed into the printer.
2. Toner is transfered to the paper from the photosensitive drum and then the paper is fed to the fuser/delivery stage.

Skew correction by the registration shutter

If the paper fed into the printer is skewed, it will be adjusted when it hits the registration shutter. Figure 4-13 Skew correction on page 72 illustrates how the registration shutter corrects skewed paper.

Download Service Manual And Resetter Printer at http://printer1.blogspot.com

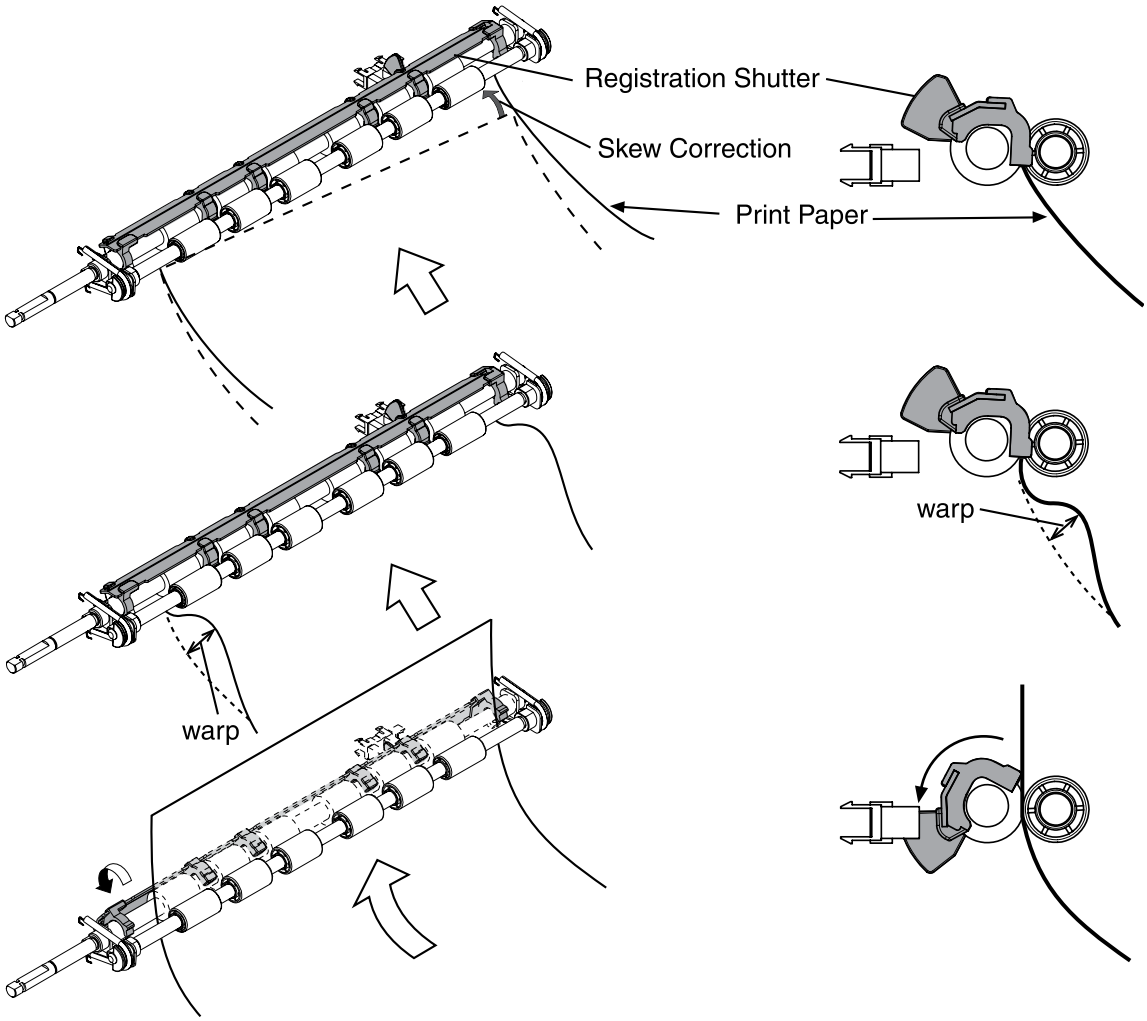

Figure 4-13 Skew correction

Jam detection

This printer is provided with the following paper detection sensors to detect the presence of paper and whether or not the paper feed is operating normally.

- Registration paper sensor (SR1)
- Pre-fuser paper sensor (SR5)
- Fuser delivery paper sensor (SR4)

The CPU determines a paper jam by checking whether or not paper is present at the sensor at the check timing. The check timing is stored in the memory of the CPU. If the CPU determines a jam, it stops the print operation and notifies the formatter of a jam occurrence.

For more information, see Clearing jams on page 142.

Download Service Manual And Resetter Printer at http://printer1.blogspot.com

Solenoid, motor, and fan locations

The following illustration shows the locations of the solenoids, motor, and fan.

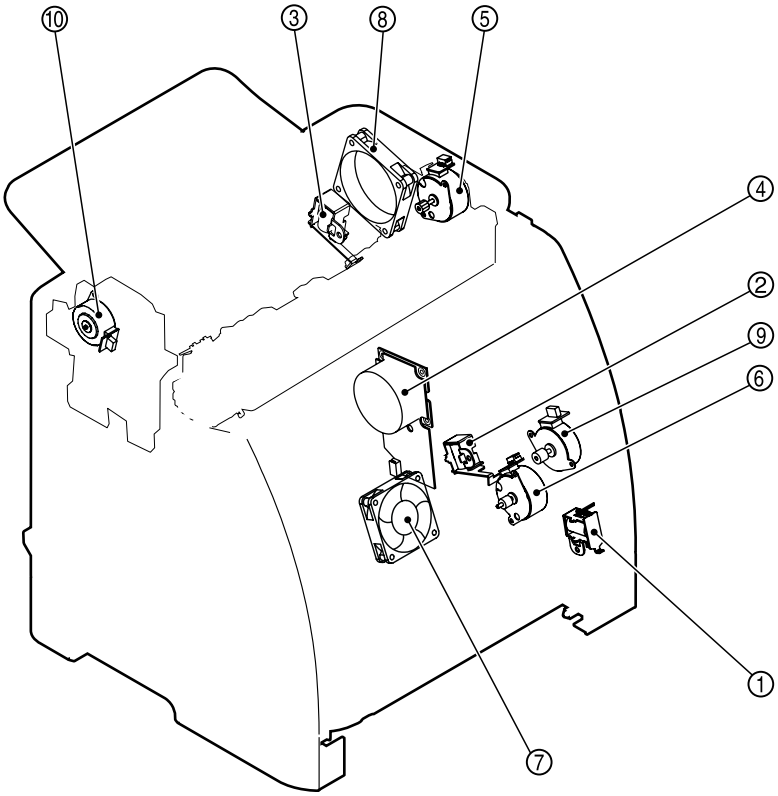

Figure 4-14 Location of solenoids, motors, and fans

1	Pickup solenoid (SL1)
2	Magenta, cyan, and yellow developing cylinder drive solenoid (SL2)
3	Black developing cylinder drive solenoid (SL3)
4	Main motor (M1)
5	Fusing/delivery motor (M2)
6	Pickup motor (M3)
7	Fan 1 (FM1)
8	Fan 2 (FM2)
9	Duplexing feed motor (M6)
10	Reverse motor (M7)

Printed circuit assembly locations

The following illustration shows the locations of the printed circuit assemblies. Location of the printed circuit assemblies and list of parts are also identified in Figure 7-15 PCA assembly location on page 208.

Download Service Manual And Resetter Printer at http://printer1.blogspot.com

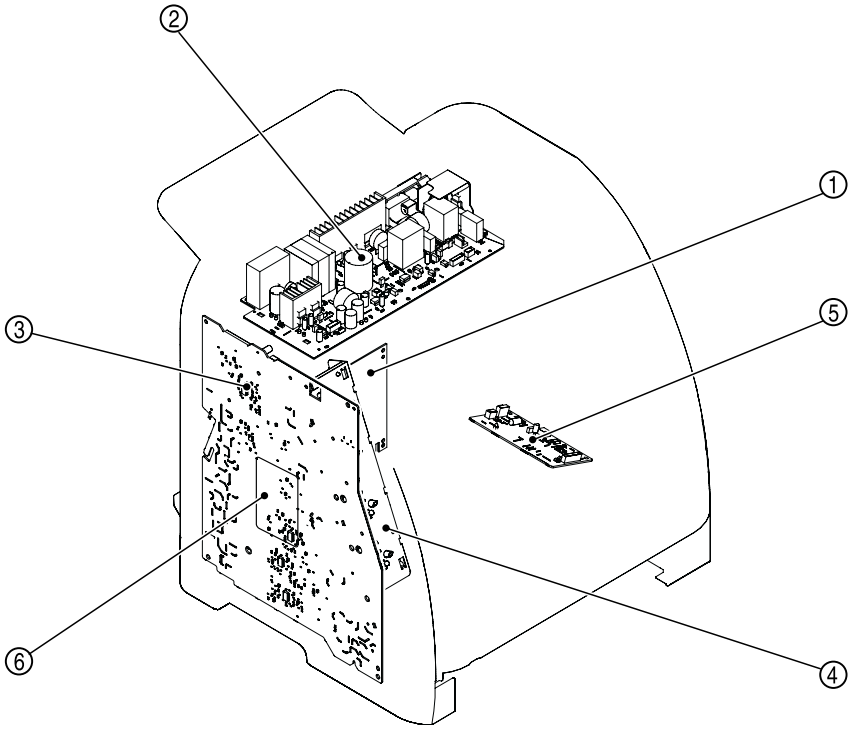

Figure 4-15 Location of printed circuit assemblies

1	DC controller PCA
2	Low-voltage power supply PCA
3	High-voltage power supply PCA
4	Memory controller PCA
5	Duplexing driver PCA
6	Sub high-voltage power supply PCA

250-sheet tray solenoid and printed circuit locations

The following illustration shows the locations of the 250-sheet tray solenoid and printed circuit assembly.

Download Service Manual And Resetter Printer at http://printer1.blogspot.com

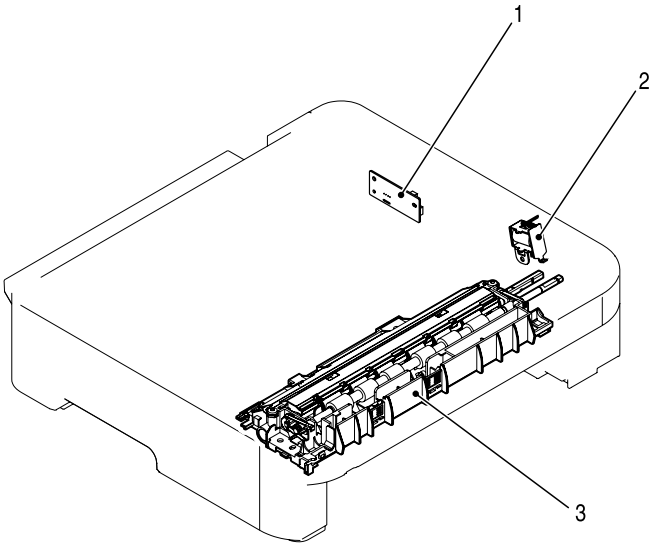

Figure 4-16 Location of 250-sheet tray solenoid and printed circuit assembly

1	Paper feeder PCA
2	Paper feeder pickup solenoid
3	Paper-pickup feeder unit

Duplexing mechanism

The duplexing mechanism feeds paper to the reversing unit after the first side is printed, and then it returns the paper to the duplexing feed unit so that the print side of the paper is reversed for second-side printing.

The duplexing driver controls the duplexing feed motor (M6) and the reverse motor (M7), which drives each feed roller of the duplexing feed unit. It also controls the reverse solenoid (SL5), which drives the duplexing deflector.

The top cover can be opened to remove jams in the reverse unit. The top cover open sensor (SR7) is used for open/close detection. After clearing a jam in the duplexing mechanism, open the front door to make sure there are no jams in other areas.

The paper path is shown in Figure 4-17 Duplexing paper path on page 76. The duplexing feed motor, reverse motor, solenoid, and sensor are shown in Figure 4-18 Duplexing PCA schematic on page 77 and Figure 4-19 Duplexing components on page 79.

Download Service Manual And Resetter Printer at http://printer1.blogspot.com

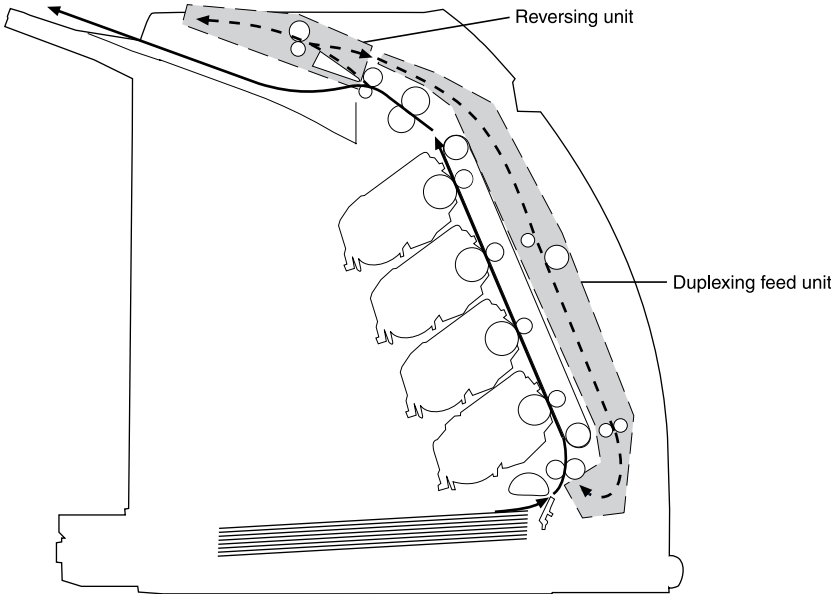

Figure 4-17 Duplexing paper path

Download Service Manual And Resetter Printer at http://printer1.blogspot.com

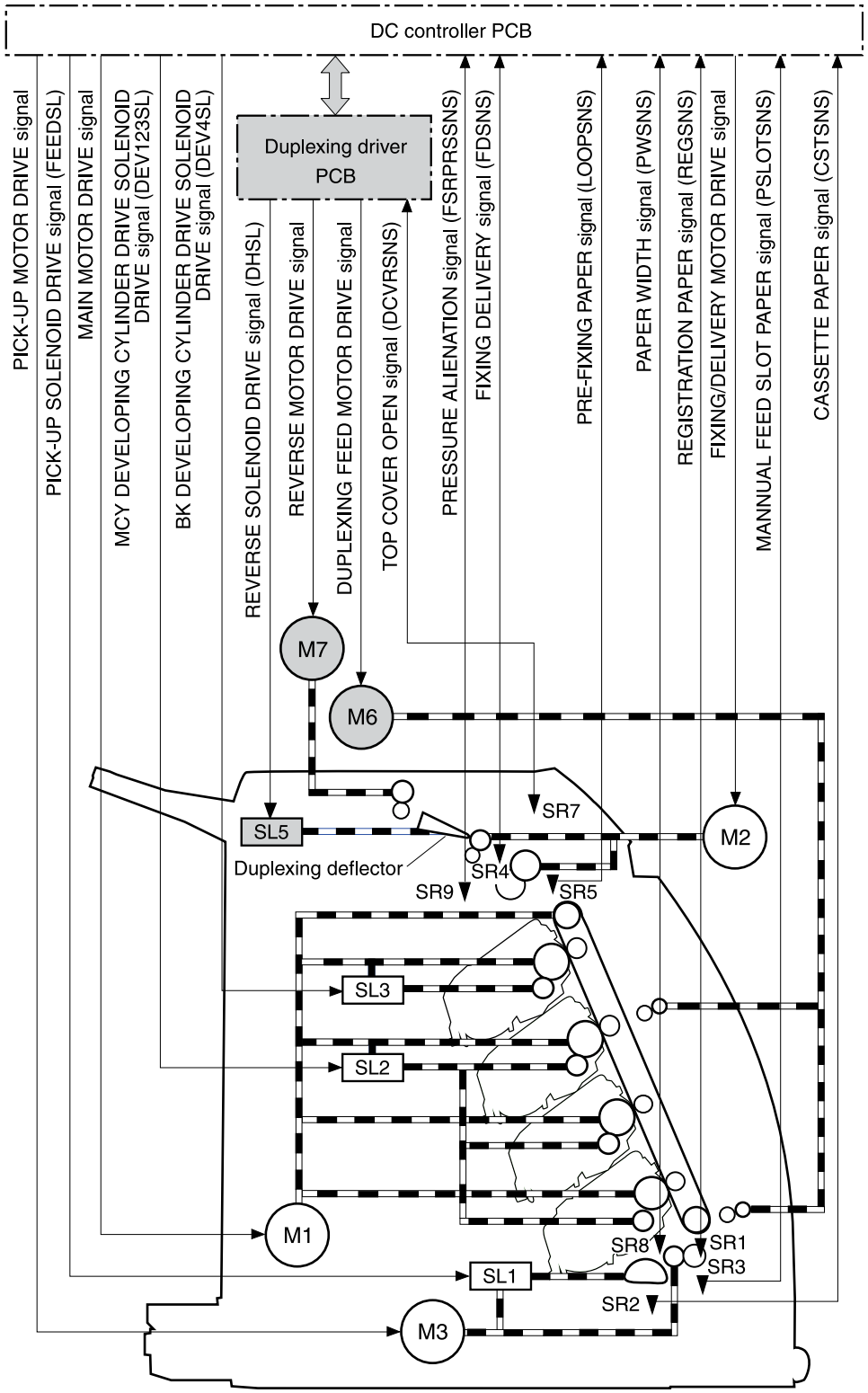

Figure 4-18 Duplexing PCA schematic

Table 4-3 Duplexing PCA schematic labels

SR1	Registration paper sensor

Download Service Manual And Resetter Printer at http://printer1.blogspot.com

Table 4-3 Duplexing PCA schematic labels (continued)

SR2	Cassette paper sensor
SR3	Manual feed slot paper sensor
SR4	Fixing delivery paper sensor
SR5	Pre-fixing paper sensor
SR7	Top cover open sensor
SR8	Paper width sensor
SR9	Pressure alienation sensor
M1	Main motor
M2	Fixing/delivery motor
M3	Pick-up motor
M6	Duplexing feed motor
M7	Reverse motor
SL1	Cassette pick-up solenoid
SL2	MCY developing cylinder drive solenoid
SL3	Bk developing cylinder drive solenoid
SL5	Reverse solenoid

The operational sequence of duplex printing is as follows:

1. The duplexing driver activates the reverse solenoid (SL5) to drive the duplexing deflector when the leading edge of paper arrives at the fixing unit. It then rotates the reverse motor (M7) clockwise and feeds the paper to the reverse unit.
2. The duplexing driver stops the reverse motor and turns off the reverse solenoid after the trailing edge of the paper passes through the fixing delivery paper sensor.
3. The duplexing driver rotates the reverse motor counter-clockwise to feed the paper to the duplexing feed unit. It turns on the duplexing feed motor (M6) after a specified time to feed the paper to the duplexing pick-up position. The oblique roller corrects skew and makes sure that edge of the paper is flush with the left guide.
4. If the duplexing driver has received the duplexing pick-up command, the paper is fed to the registration roller. If it has not, the paper is stopped and is fed to the registration roller when the command is received.
5. The second side of the paper is printed and fed to the delivery tray.

Download Service Manual And Resetter Printer at http://printer1.blogspot.com

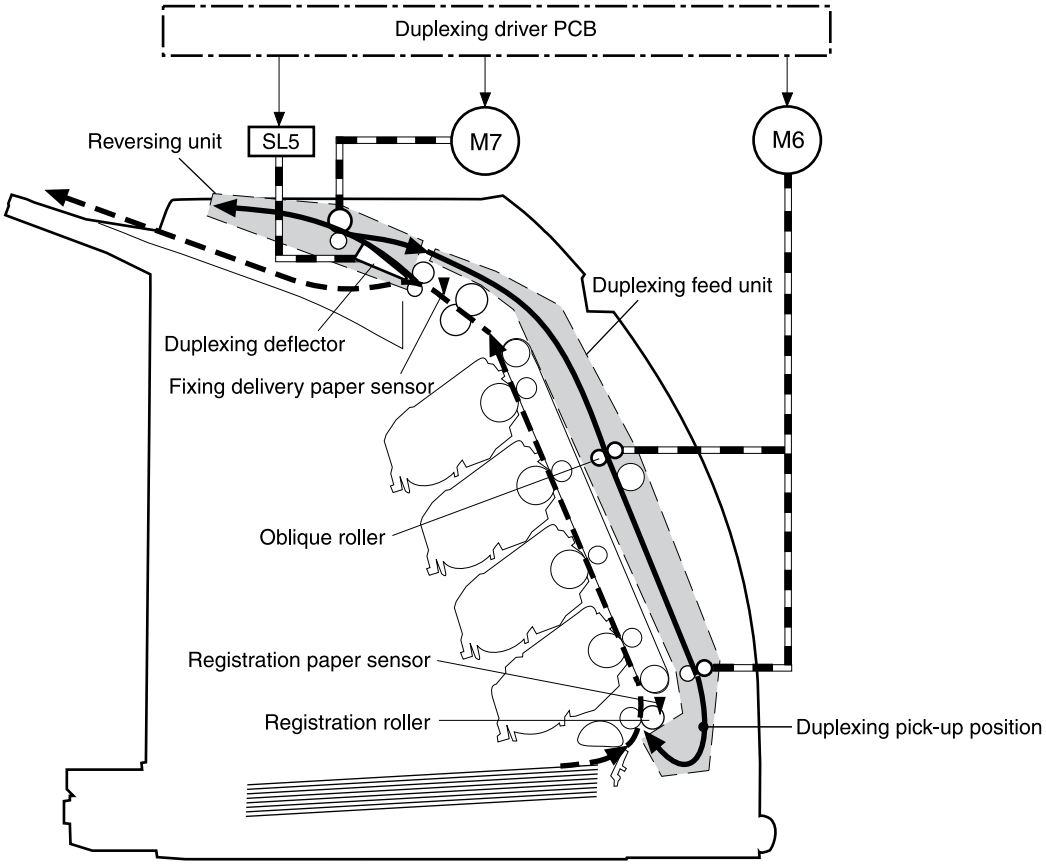

Figure 4-19 Duplexing components

If paper fed from the duplexing pick-up position does not arrive at the registration sensor within a prescribed period of time, the DC controller stops the printing operation and notifies the video controller of a duplexing pick-up jam.

Download Service Manual And Resetter Printer at http://printer1.blogspot.com

Service-only tools (SERVICE ONLY)

General timing chart

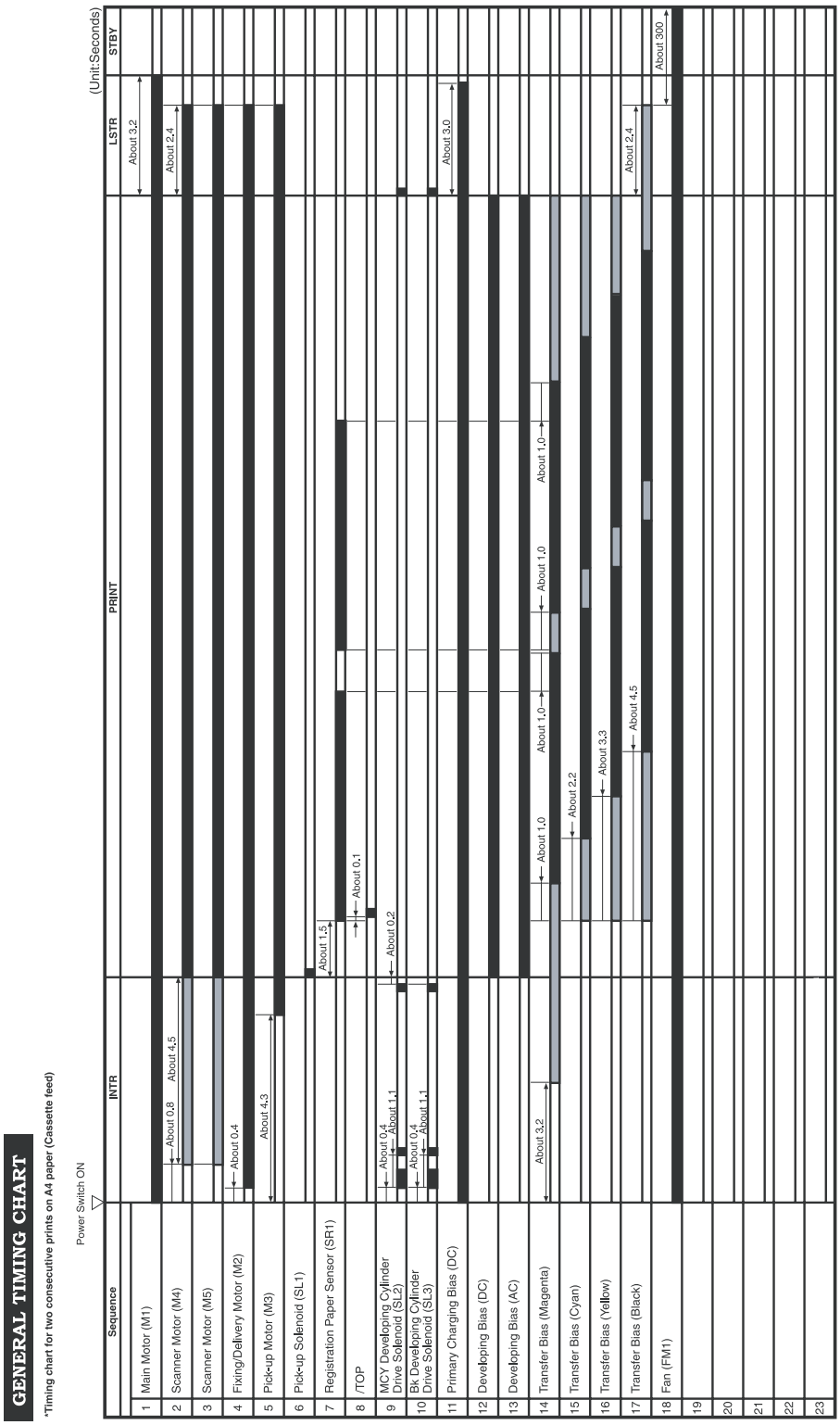

Download Service Manual And Resetter Printer at http://printer1.blogspot.com

Printer calibration

Calibration settings are configured with Printer Management Language (PML)/Printer Job Language (PJL) commands, except for new cartridge installation. Calibration can also be configured using the embedded Web server and HP ToolboxFX. Calibration occurs during the following conditions and intervals:

- **Power-on calibration**

  Calibration during power-on can be configured for the following intervals:

  - Always calibrate at power-on
  - Never calibrate at power-on
  - Calibrate after 1-6 minutes (default is 15 minutes) of idle time after the first job since the printer was turned on or 12, 24, 48, 96, or 168 hours (default is 48 hours) of idle time.

- **Page count calibration**

  Calibration occurs at the end of the first job that passes 150 color pages since the previous calibration occurred. Page count calibration settings can be configured for the following intervals:

  - Do not do page count calibrations
  - Calibrate after 150 pages have been printed since the last calibration. This is the default setting.

  NOTE Page count calibration cannot be set using the embedded Web server.

- **Elapsed time calibration**

  Elapsed time calibration will occur when the first job is sent after the elapsed time is exceeded. Use PML/PJL commands to configure the following intervals:

  - Do not perform elapsed time calibration
  - After 12, 24, 48, 96, or 168 hours (default is 48 hours) or more have elapsed since the last calibration (or power-on), and after 1-6 minutes (default is 15 minutes) of idle time from the first job after 12, 24, 48, 96, or 168 hours (default is 48 hours) have elapsed.

- **On-demand calibration**

  Calibrate the printer using the printer control panel. For more information about printer calibration, see Printer calibration on page 171.

- **New consumable calibration**

  When a new print cartridge is installed, the printer calibrates.

  NOTE When a new black print cartridge is replaced, a cleaning page will print before the printer calibrates.

  If printing stops when the cartridge is out, requiring the user to either install a new cartridge or select to print with toner out override, a calibration will not occur until the depleted cartridge is replaced, printing resumes, and all jobs currently in the queue are completed or cancelled. This could result in an interval of several pages where a new cartridge is using the old cartridge's calibration data.

Download Service Manual And Resetter Printer at http://printer1.blogspot.com

Calibrating the printer at the control panel

Use the following steps to calibrate the printer using the printer control panel.

1. Use the (Left arrow) or the (Right arrow) button to select **SYSTEM SETUP** and then press (Select).
2. Use the (Left arrow) or the (Right arrow) button to select **PRINT QUALITY** and then press (Select). **CALIBRATE COLOR** will display on the control panel.
3. Press (Select).
4. Use the (Left arrow) or the (Right arrow) button to select **CALIBRATE NOW** and then press (Select).
5. Press (Select) to start the calibration.

Download Service Manual And Resetter Printer at http://printer1.blogspot.com

5 Removal and replacement

This chapter contains information about the following topics:

- Overview
- Service approach
- Removal and replacement procedures

Download Service Manual And Resetter Printer at http://printer1.blogspot.com

Overview

Removal and replacement strategy

Replace parts in the reverse order of their removal. Directions for difficult or critical replacement procedures are included in this section.

WARNING! The sheet-metal edges of the product can be sharp. Use caution when working on the product.

NOTE Note the length, diameter, color, type, and location of each screw. Be sure to return each screw to its original location during reassembly. Incorrectly routed or loose wire harnesses can interfere with other internal components and can become damaged or broken. Frayed or pinched harness wires can be difficult to locate. When replacing wire harnesses, always use the provided wire loops, lance points, or wire harness guides.

Electrostatic discharge

The printer contains parts that are sensitive to electrostatic discharge (ESD). Protect the parts that are sensitive to ESD by placing them in protective ESD pouches.

Required tools

Before servicing the printer, gather the following tools:

- Phillips #2 magnetized screwdriver (152–mm (6–inch) shaft)
- Small flat-blade screwdriver
- Small needle-nose pliers
- ESD strap
- Penlight (optional)

Download Service Manual And Resetter Printer at http://printer1.blogspot.com

Service approach

Field service on this printer is limited to a recommended time of 30 minutes, which includes troubleshooting, teardown, and repair. Repairs that require more time should not be made and the printer should be replaced.

The following are the major internal assemblies that can be replaced on this printer:

- Fuser
- ETB
- DC controller
- Formatter
- Control-panel display

If troubleshooting or a control-panel message indicates that the failure is not associated with one of these parts, do not attempt to repair the printer. Instead, replace the unit. For more information on messages that would indicate a printer needs to be replaced, see Control-panel messages on page 136 and Table 7-1 Replaceable parts on page 178.

Pre-service procedures

Follow the pre-service procedures before you perform service.

1. Use the power switch to turn off the printer.
2. Remove all media from the product.
3. Place the product on an ESD mat. If an ESD mat or an ESD-protected workstation is not available, discharge body static and ground the product chassis before servicing the product.
4. Remove the print cartridges.
5. Unplug the power cord and the interface cable.
6. Lift the printer off of optional Tray 3 (if it is installed).

Download Service Manual And Resetter Printer at http://printer1.blogspot.com

Removal and replacement procedures

Print cartridge replacement

1. Open the front door.

CAUTION Do not place anything on the transfer belt (ETB), which is located on the inside of the front door.

2. Remove the used print cartridge from the printer.

3. Remove the new print cartridge from the bag. Place the used print cartridge in the bag for recycling.

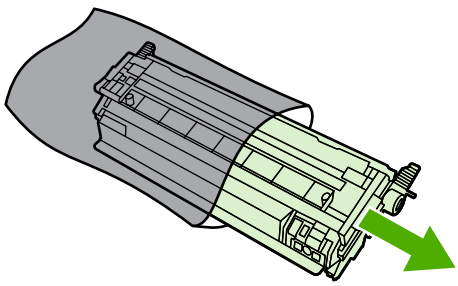

Download Service Manual And Resetter Printer at http://printer1.blogspot.com

4. Grasp the blue handle on each side of the print cartridge and distribute the toner by gently rocking the print cartridge from back to front.

CAUTION Do not touch the shutter or the surface of the roller.

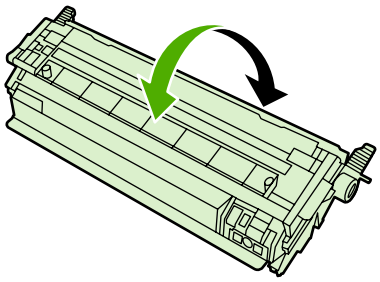

5. Remove the orange shipping locks and the orange shipping tape from the new print cartridge. Discard the shipping tape and shipping locks according to local regulations.

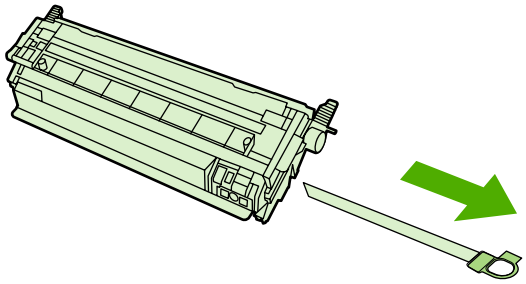

Download Service Manual And Resetter Printer at http://printer1.blogspot.com

6. Align the print cartridge with the tracks inside the printer, and using the handles, insert the print cartridge until it is firmly seated.

WARNING! Inserting the print cartridge at an angle (left side or right side ahead of the other) can cause damage to the E-label reader guide pin. If the E-label reader guide pin is broken, the control panel displays a 10.000x Supply error. See Control-panel messages on page 136 for more information.

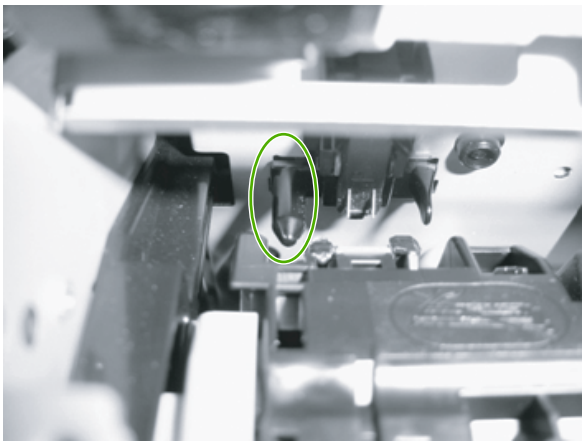

Figure 5-1 E-label reader guide pin

Download Service Manual And Resetter Printer at http://printer1.blogspot.com

7. Firmly close the front door.

After a short time, the control panel should display **Ready**.

NOTE If a cartridge is in the wrong slot or is the wrong type for the printer, the control panel will display one of the following messages: **Incorrect yellow**, **Incorrect magenta**, **Incorrect cyan**, or **Incorrect black**.

8. Installation is complete. Place the used print cartridge in the box in which the new cartridge arrived. See the enclosed recycling guide for recycling instructions.

9. If you are using a non-HP print cartridge, check the printer control panel for further instructions.

NOTE When replacing or changing a black print cartridge, a cleaning page automatically prints. This helps prevent speckles on the front or back of printed documents. For a more thorough cleaning, see To clean the paper path using HP ToolboxFX on page 37.

ETB removal and replacement

Use the following procedure to remove the ETB.

1. Remove or slightly pull out Tray 2 (RM1–1916–050CN).

Download Service Manual And Resetter Printer at http://printer1.blogspot.com

2. Remove three screws, two from the right cover assembly and one from the left cover assembly.

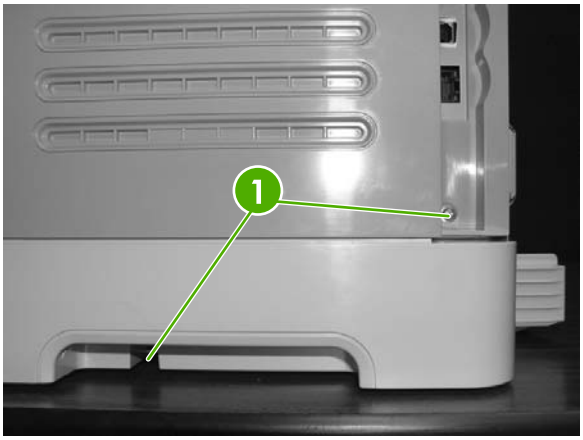

1	Two screws on right cover assembly

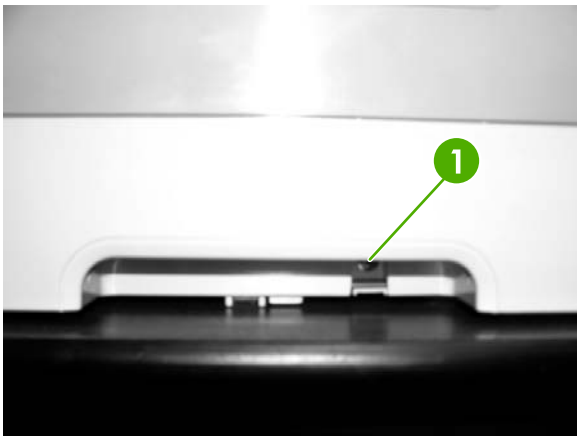

1	One screw on left cover assembly

3. Open the front door.

Download Service Manual And Resetter Printer at http://printer1.blogspot.com

4. Remove the right cover (RM1–1858–000CN), carefully twisting the front edges of the side cover outward.

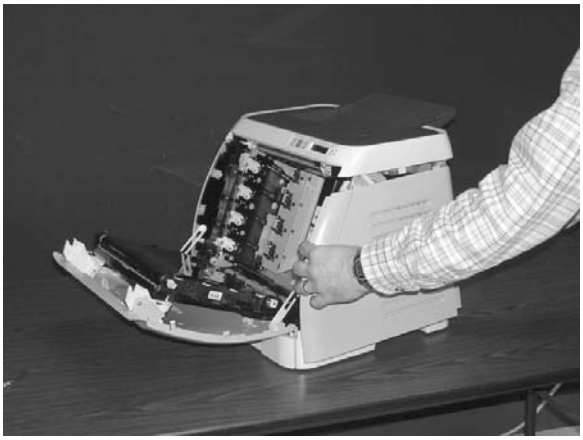

NOTE To make the removal of the right-cover assembly easier, release the tab on the inside of the cover.

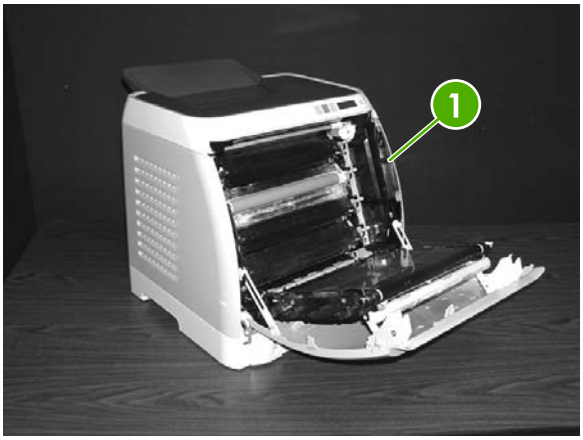

1	Release tab

Download Service Manual And Resetter Printer at http://printer1.blogspot.com

5. Remove the left cover.

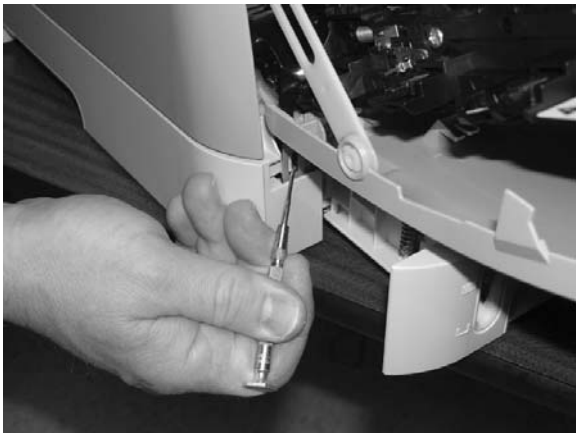

6. Squeeze the white link lever on the left side.

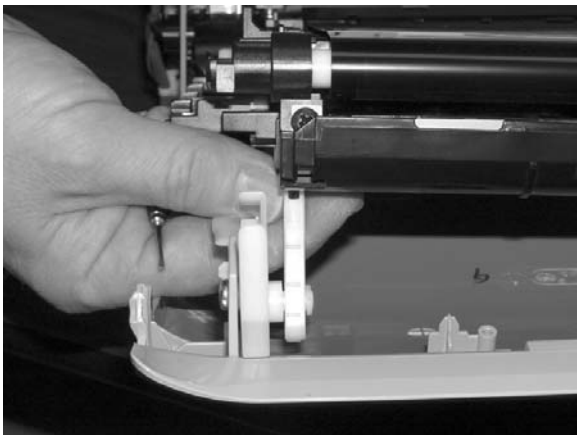

Download Service Manual And Resetter Printer at http://printer1.blogspot.com

7. Remove the screw on the right white plastic catch, and then remove the plastic catch.

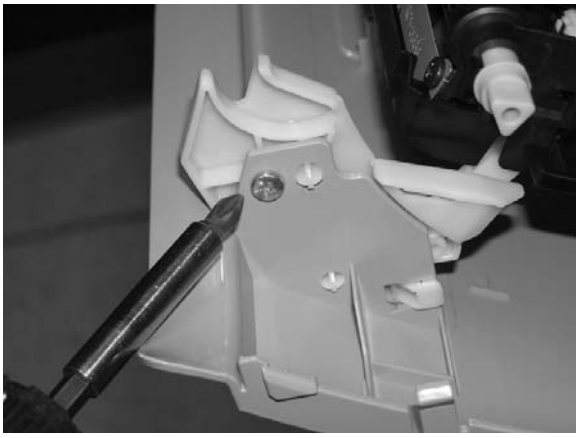

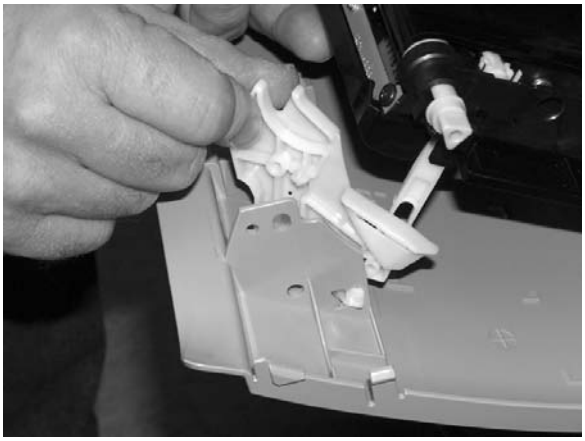

8. Close the ETB.

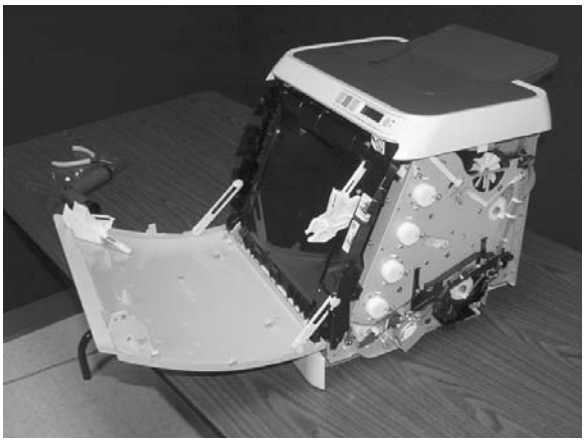

Download Service Manual And Resetter Printer at http://printer1.blogspot.com

9. Remove the small black cable cover on the left side of the printer by carefully snapping it out of place.

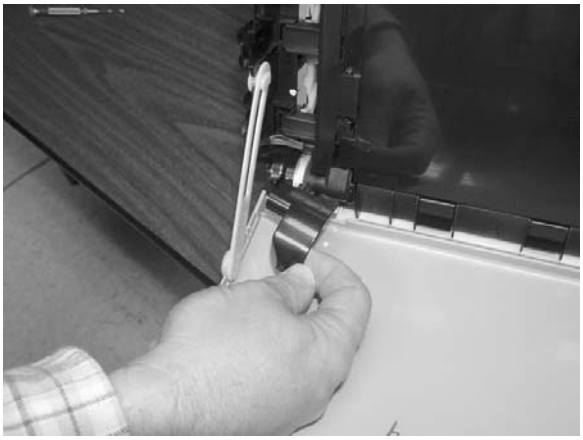

10. Remove one grounding screw from the ETB harness.

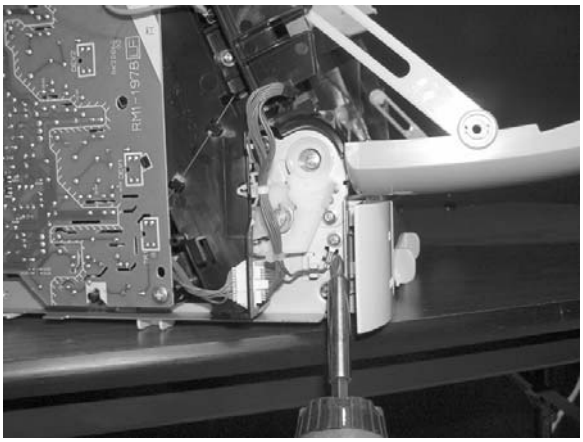

11. Pull out the white wire holder by pushing it up.

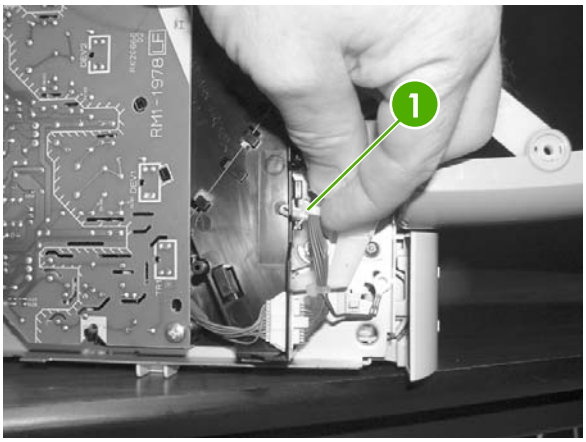

1	White wire holder

Download Service Manual And Resetter Printer at http://printer1.blogspot.com

12. Pull out the ETB connector.

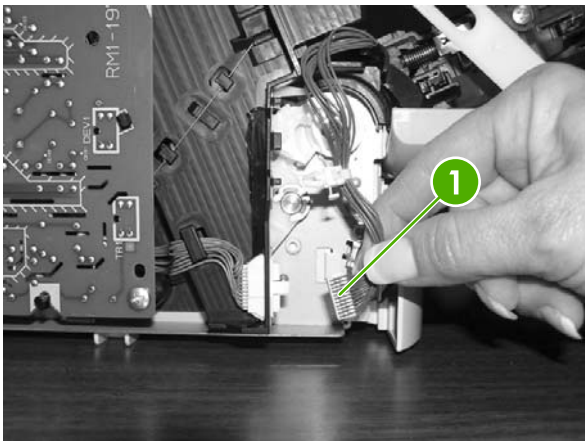

1	ETB connector

13. Remove one screw from each hinge cam on both sides.

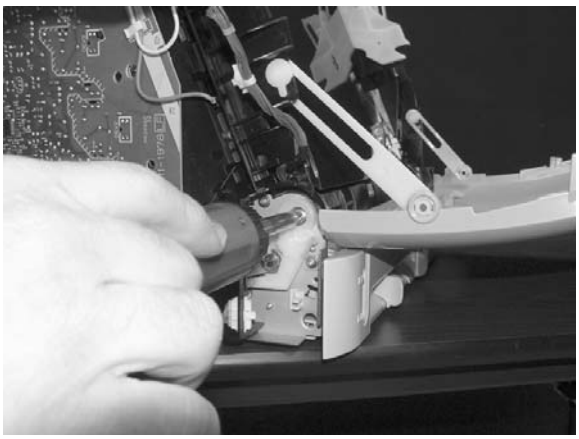

14. Using needle-nose pliers, remove the hinge left cam and the right hinge cam.

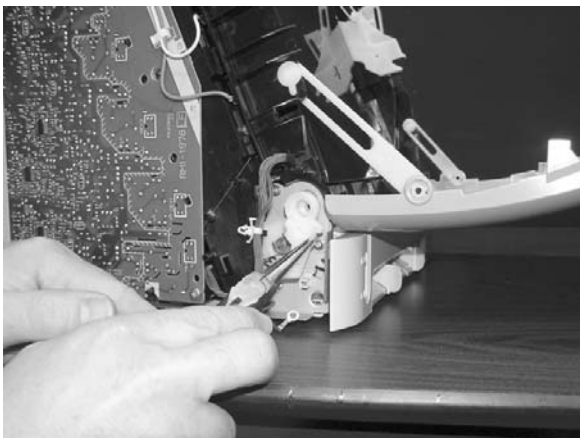

Download Service Manual And Resetter Printer at http://printer1.blogspot.com

15. Remove the ETB.

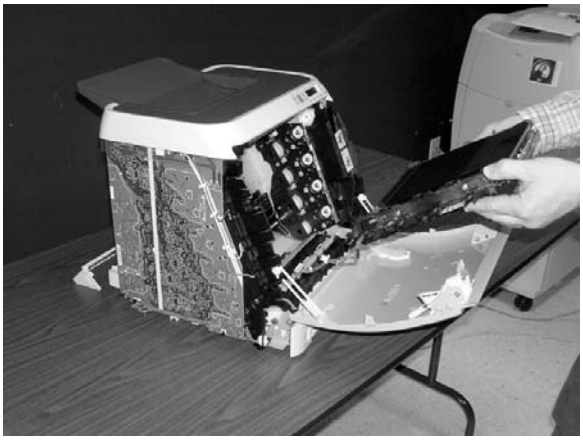

Use the following procedure to replace the ETB.

1. Align each foot of the ETB with the respective holes, securing the right side first and then the left side.

1	Alignment location

2. Complete replacement by following steps 1 through 14 above in reverse order.

NOTE When replacing the right cover, align the tabs on the upper edge of the right cover and lower edge of the face-down cover with their respective slots.

Download Service Manual And Resetter Printer at http://printer1.blogspot.com

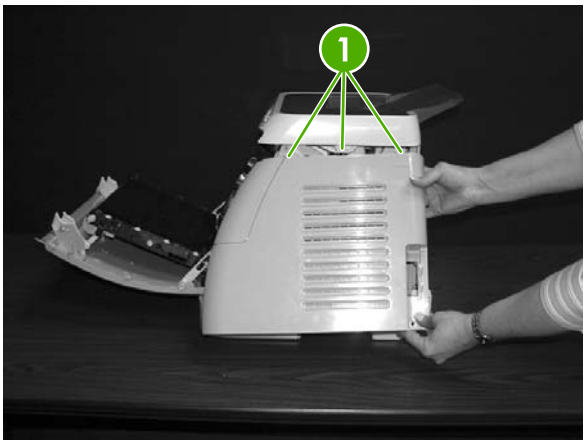

1	Tabs

Fuser removal and replacement

Use the following procedure to remove the fuser.

1. Unplug the power cable.

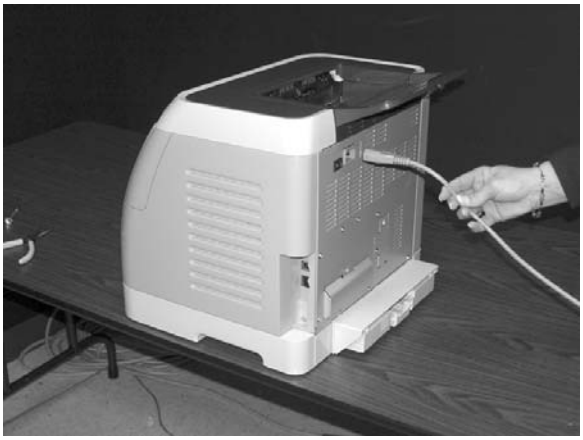

2. Remove the paper delivery tray assembly (RM1–1859–020CN).

Download Service Manual And Resetter Printer at http://printer1.blogspot.com

3. Remove two screws from the right-cover assembly (RM1–1860–000CN).

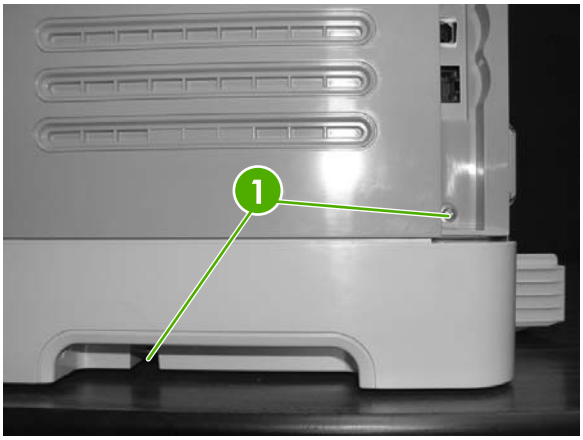

1	Two screws

4. Remove the right-cover assembly, carefully disengaging the catches.

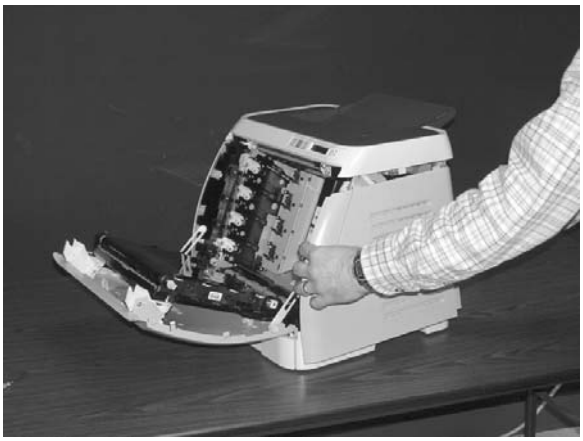

5. Unplug the control-panel cable.

Download Service Manual And Resetter Printer at http://printer1.blogspot.com

6. Insert a screwdriver to loosen the release tab on each side of the upper face cover.

7. Remove the upper face cover (RC1–5174–000CN).

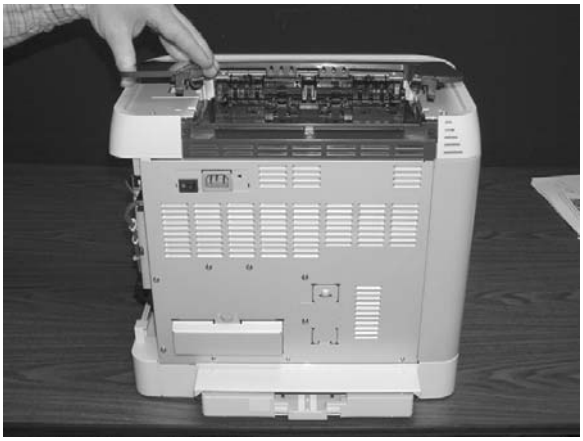

8. Remove four screws from the upper cover.

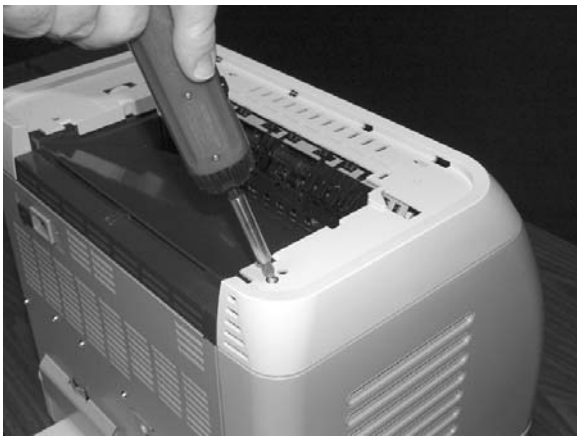

Download Service Manual And Resetter Printer at http://printer1.blogspot.com

9. Lift up and remove the face-down cover (RC1–5173–000CN).

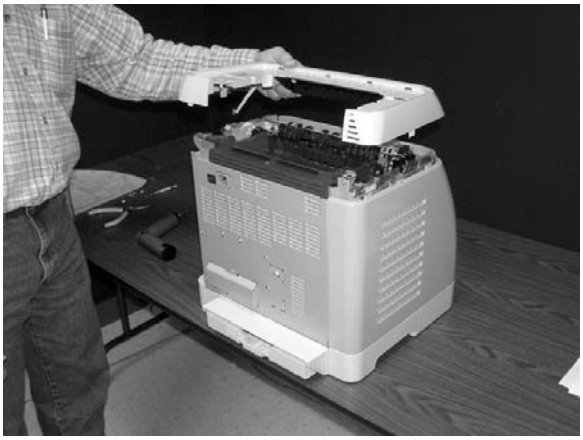

10. Remove the output tray by releasing the tabs.

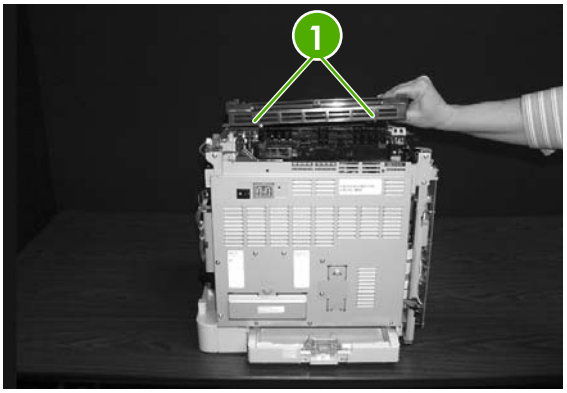

1	Release tabs

11. Unplug the harness from the fuser motor.

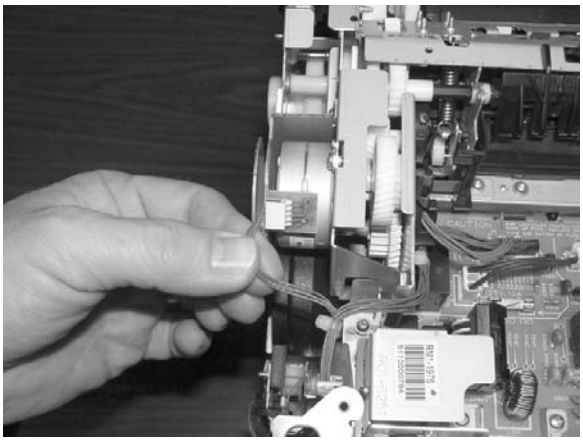

Download Service Manual And Resetter Printer at http://printer1.blogspot.com

12. Open two clips and remove one clip to remove the fuser connector.

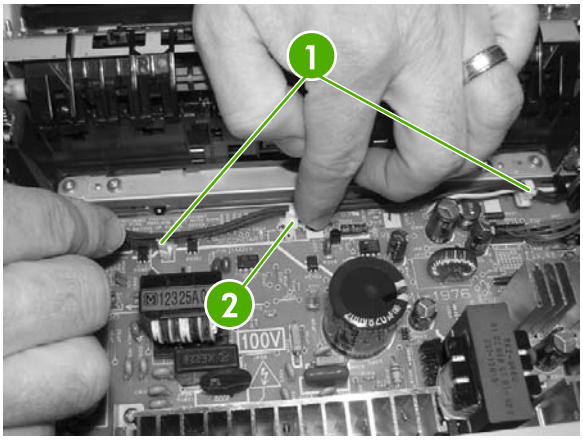

1	Open clips
2	Remove clip

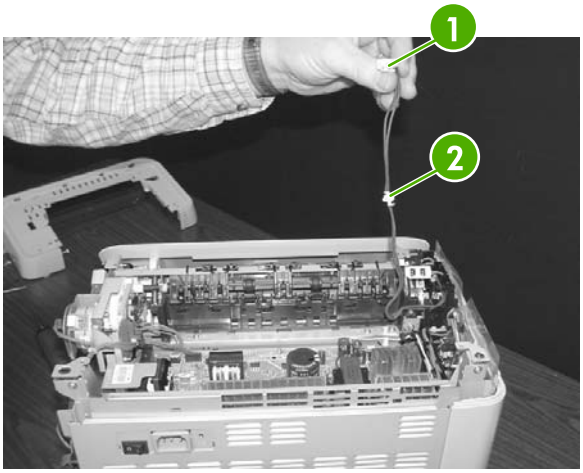

1	Fuser connector
2	Remove clip from the board by pulling up

Download Service Manual And Resetter Printer at http://printer1.blogspot.com

13. Unplug two three-pin optical encoder wires.

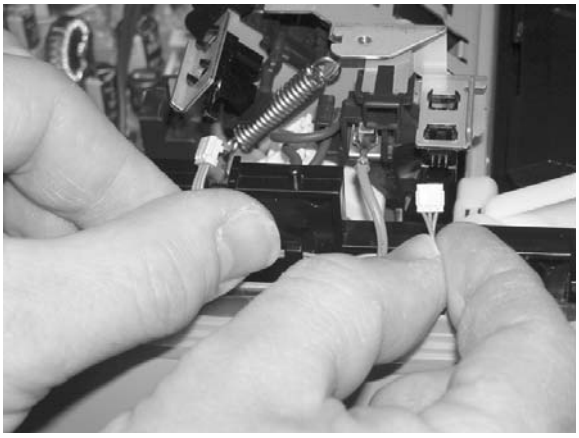

14. Unplug the red high-voltage bias wire.

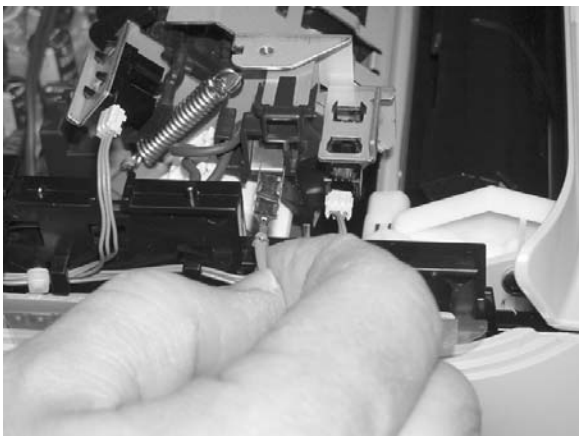

15. Remove the thermistor wire.

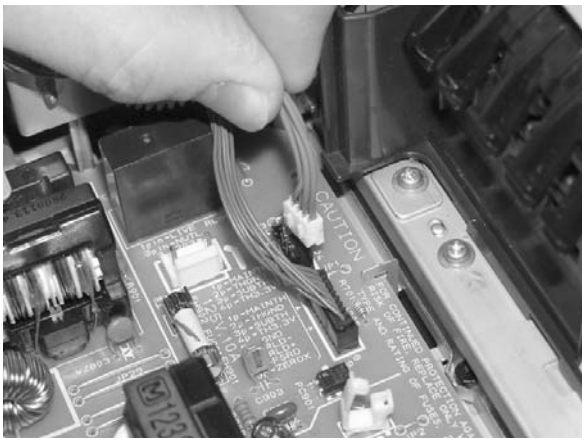

Download Service Manual And Resetter Printer at http://printer1.blogspot.com

16. Remove the wiring harness.

17. Remove three screws from the fuser chassis.

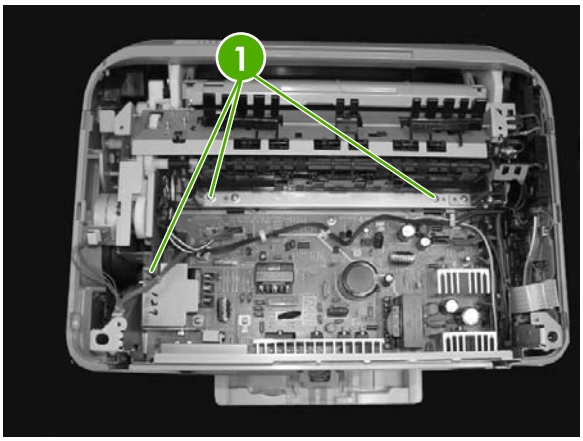

1	Three screws

18. Gently rocking if necessary, roll the fuser forward to remove.

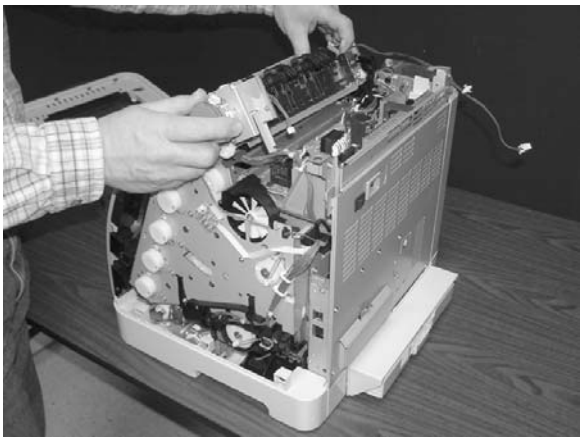

Download Service Manual And Resetter Printer at http://printer1.blogspot.com

Use the following procedure to replace the fuser.

1. Align the fuser tabs with their respective holes.

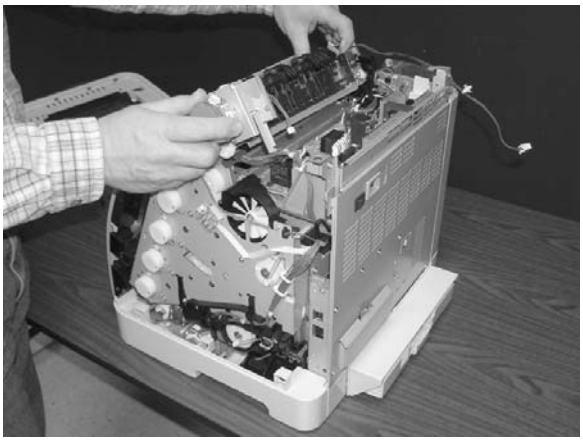

2. Complete replacement by following steps 1 through 18 above in reverse order.

NOTE Connect the control-panel cable before replacing the right cover.

NOTE When replacing the right cover, align the tabs on the upper edge of the right cover and lower edge of the face-down cover with their respective slots.

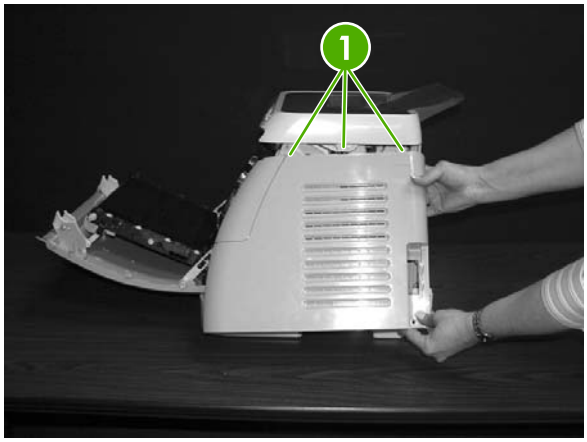

1	Tabs

Download Service Manual And Resetter Printer at http://printer1.blogspot.com

Formatter removal and replacement

Use the following procedure to remove the formatter.

1. Remove the cassette dust cover (RC1–5200–000CN).

2. Remove nine screws from the rear plate (RC1–5227–020CN).

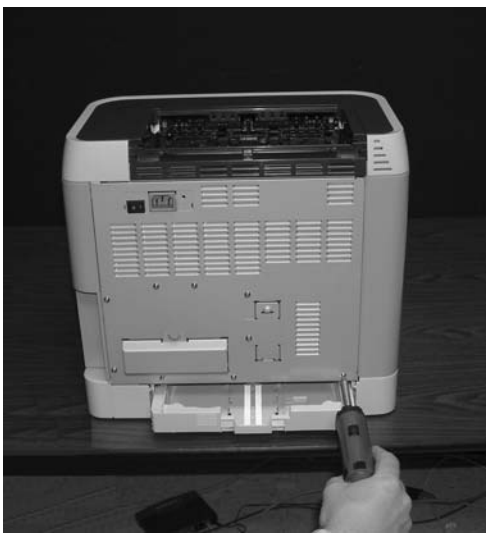

Download Service Manual And Resetter Printer at http://printer1.blogspot.com

3. Remove the rear plate.

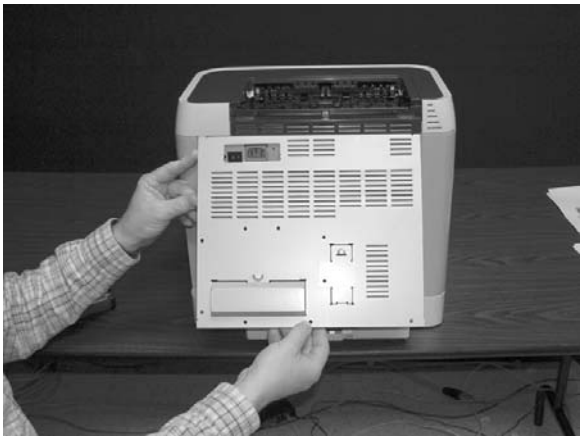

4. Unplug three connectors: two data connectors and one power connector.

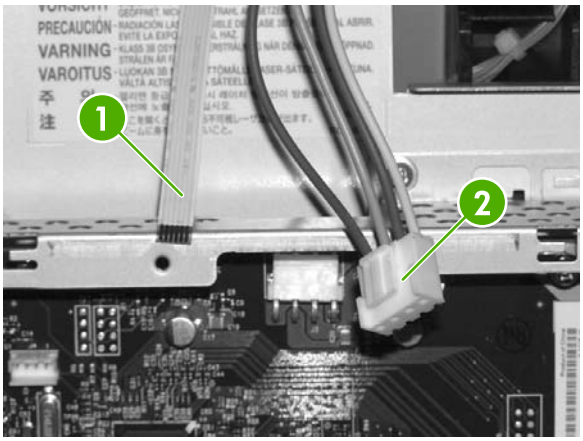

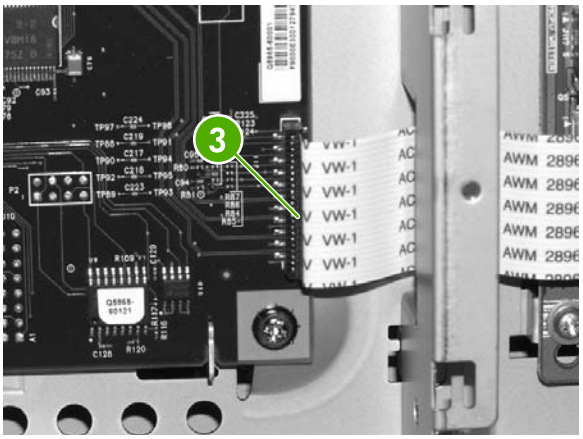

1	Flat flex cable
2	Power connector
3	VW-1 flat flex cable

Download Service Manual And Resetter Printer at http://printer1.blogspot.com

5. Remove four screws from the formatter.

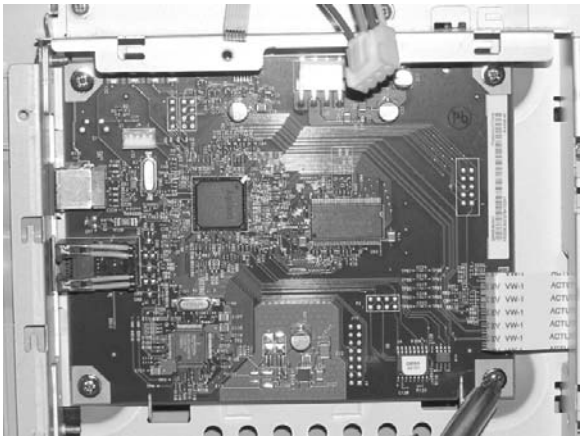

6. Lifting and remove the formatter.

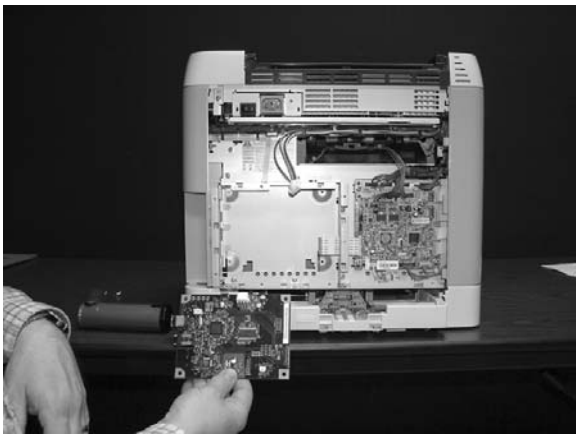

To replace the formatter, follow steps 1 through 6 above in reverse order.

NOTE When replacing the right cover, align the tabs on the upper edge of the right cover and lower edge of the face-down cover with their respective slots.

Download Service Manual And Resetter Printer at http://printer1.blogspot.com

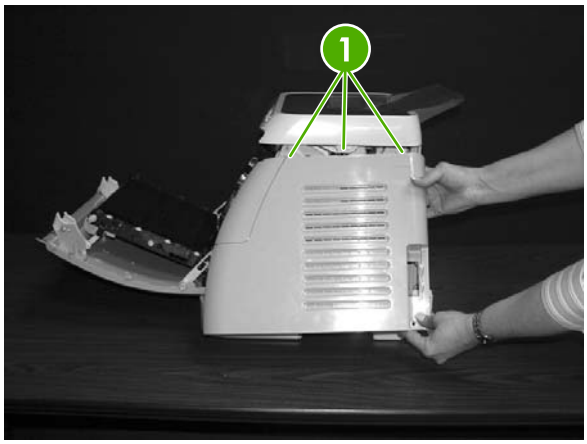

1	Tabs

DC controller removal and replacement

Use the following procedure to remove the DC controller.

1. Remove the cassette dust cover (RC1–5200–000CN).

Download Service Manual And Resetter Printer at http://printer1.blogspot.com

2. Remove nine screws from the rear plate (RC1–5227–020CN).

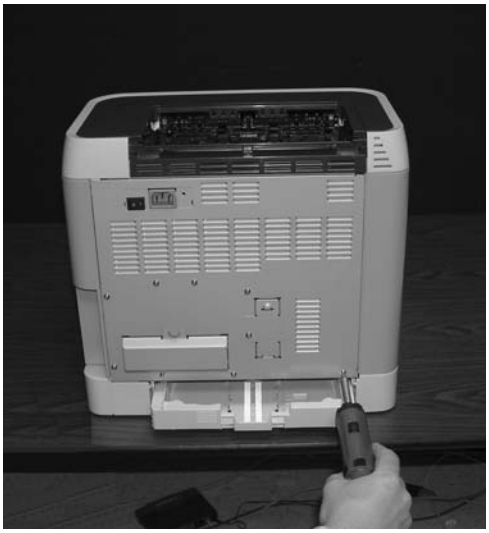

3. Remove the rear plate.

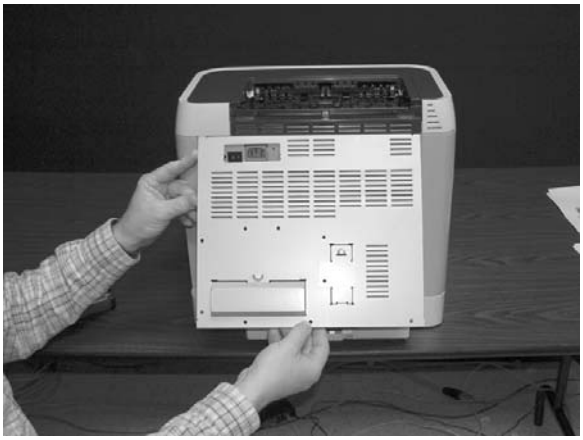

4. Gently unplug sixteen connectors.

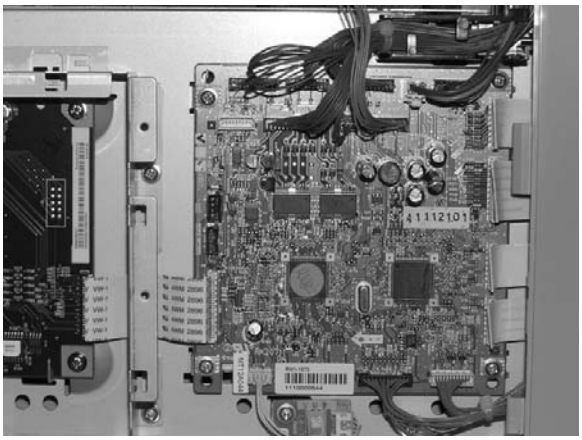

Download Service Manual And Resetter Printer at http://printer1.blogspot.com

5. Remove four screws from the DC controller.

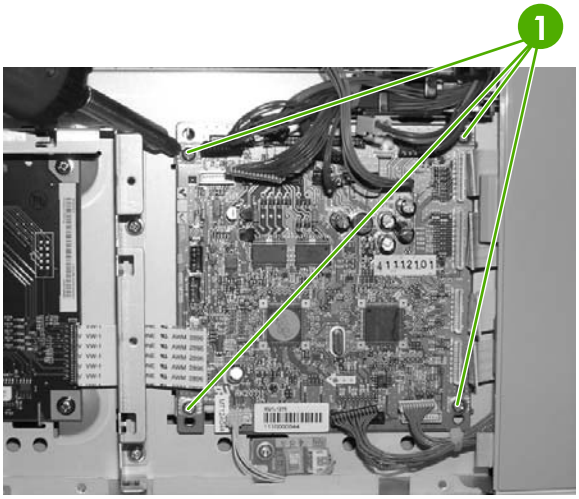

1	Four screws

6. Remove the DC controller PCA assembly (RM1–3423–000CN).

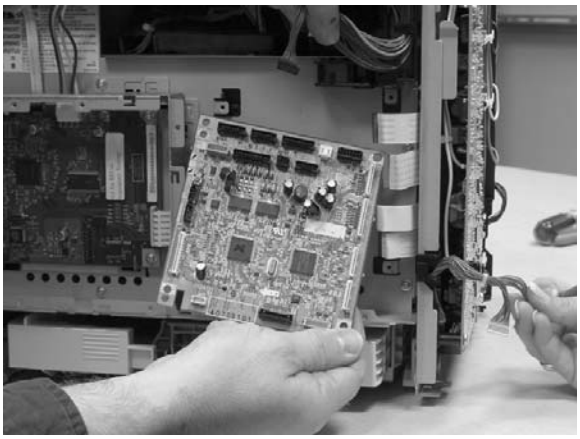

To replace the DC controller, follow steps 1 through 6 above in reverse order.

Download Service Manual And Resetter Printer at http://printer1.blogspot.com

Separation assembly removal and replacement

Use the following procedure to remove the separation assembly.

1. Remove Tray 2 (shown) or optional Tray 3.

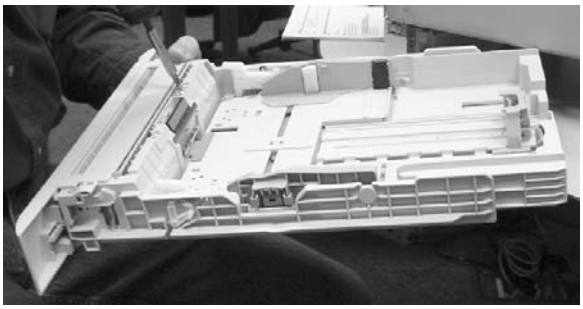

2. Remove two screws that attach the separation assembly.

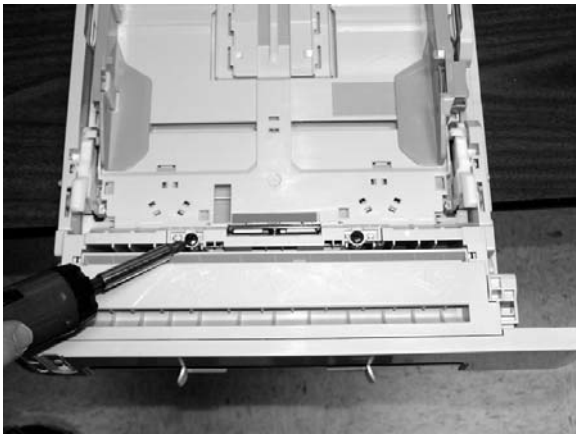

3. Remove the separation assembly (RM1–1922–000CN).

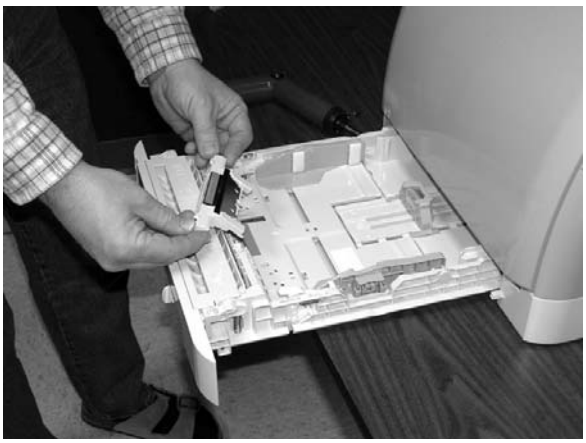

To replace the separation assembly, follow steps 1 through 3 above in reverse order.

NOTE Align the tabs with the two slots and then replace the separation assembly.

Download Service Manual And Resetter Printer at http://printer1.blogspot.com

Paper-pickup roller removal and replacement

Use the following procedures to remove the paper-pickup roller.

1. Open the front door.

2. Remove the print cartridges.

Download Service Manual And Resetter Printer at http://printer1.blogspot.com

3. Remove two screws.

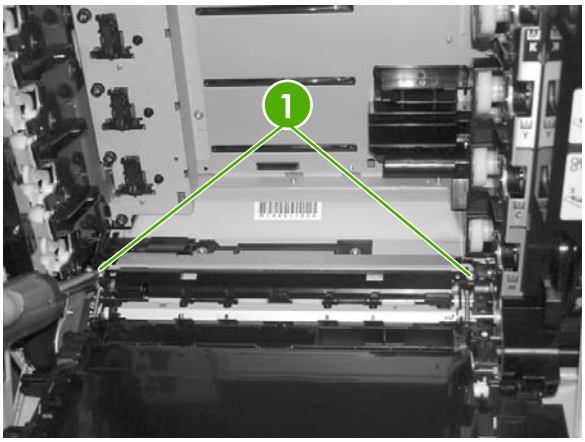

1	Two screws

4. Remove the pre-transfer guide.

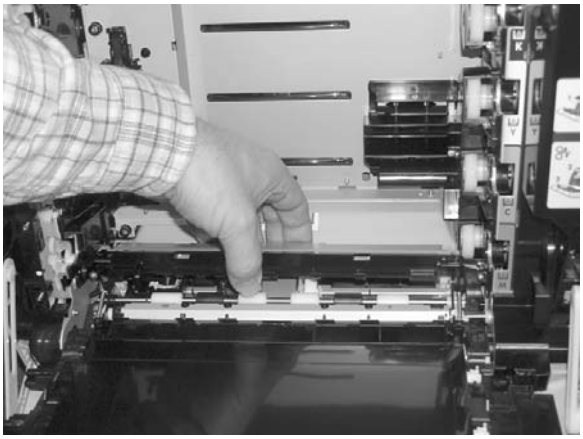

5. Use a small screwdriver to pull back on the tabs.

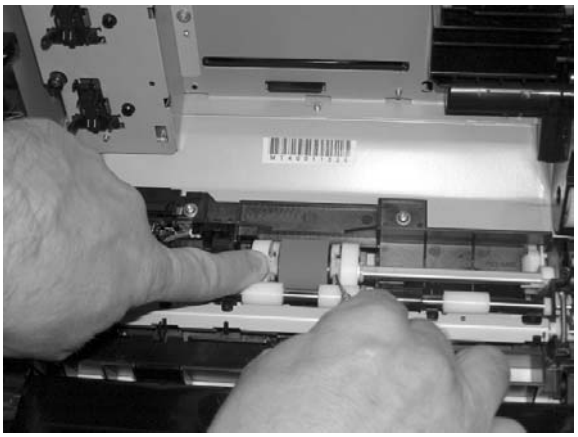

Download Service Manual And Resetter Printer at http://printer1.blogspot.com

6. Rotate the paper pickup roller (RC1-5440-000CN) toward the back and remove it.

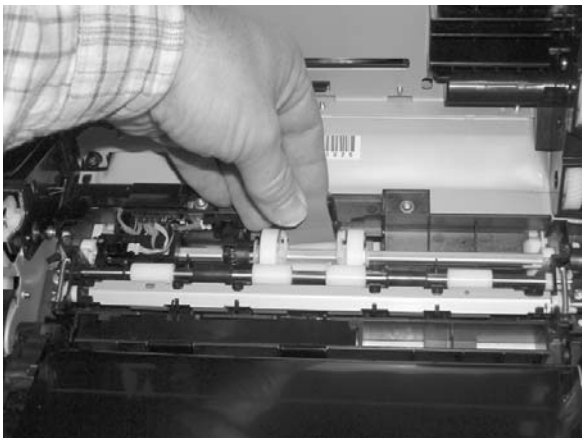

To replace the paper-pickup roller, follow steps 1 through 6 above in reverse order.

Control panel removal and replacement

Use the following procedure to remove the control panel.

1. Remove two screws from the right-cover assembly.

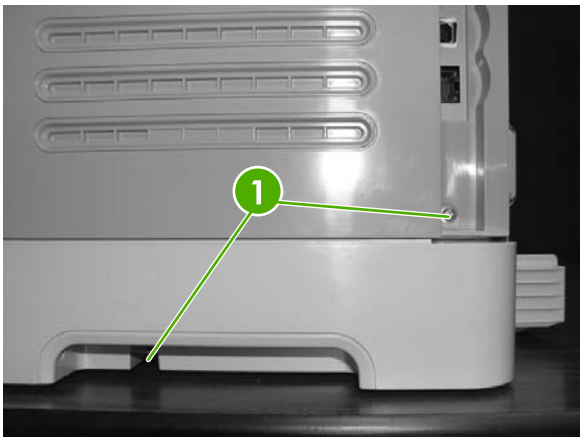

1	Two screws

Download Service Manual And Resetter Printer at http://printer1.blogspot.com

2. Remove the paper-delivery tray assembly (RM1–1859–000CN).

3. Remove the right-cover assembly (RM1–1860–000CN), carefully twisting the front edges of the side covers outward to remove.

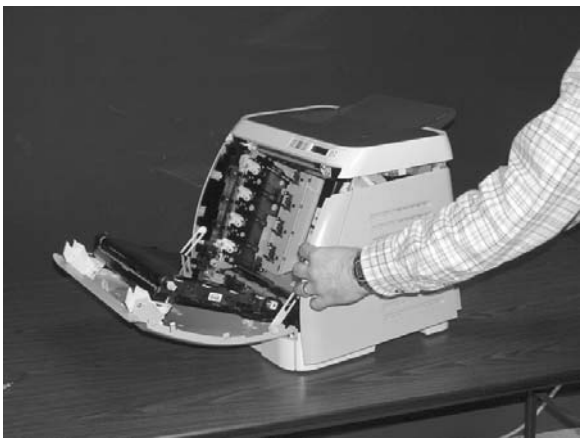

4. Unplug the control-panel cable.

Download Service Manual And Resetter Printer at http://printer1.blogspot.com

5. Lift up and remove the upper face cover.

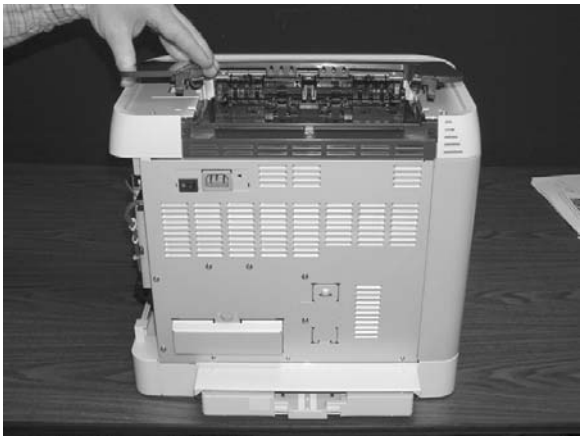

6. Remove four screws from the upper cover.

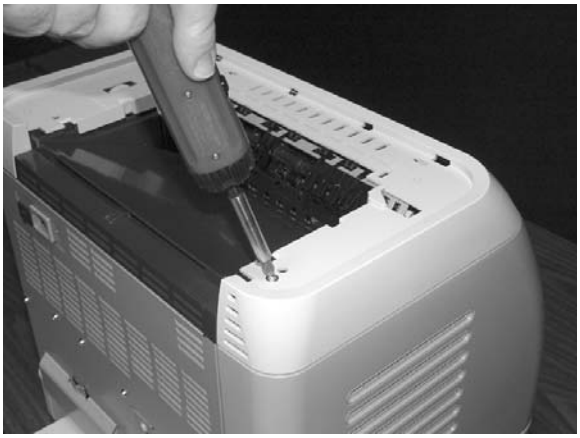

Download Service Manual And Resetter Printer at http://printer1.blogspot.com

7. Remove one screw from the inside upper cover and then remove the black output guide.

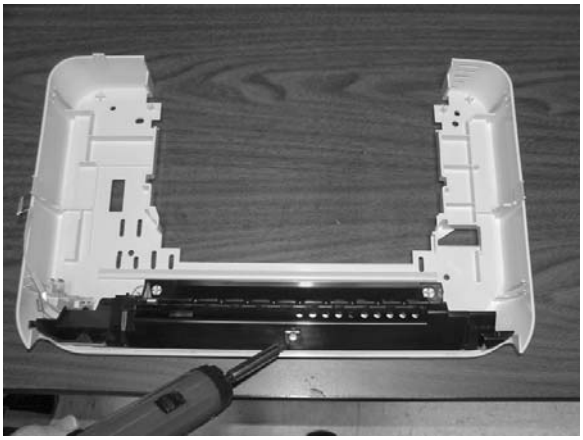

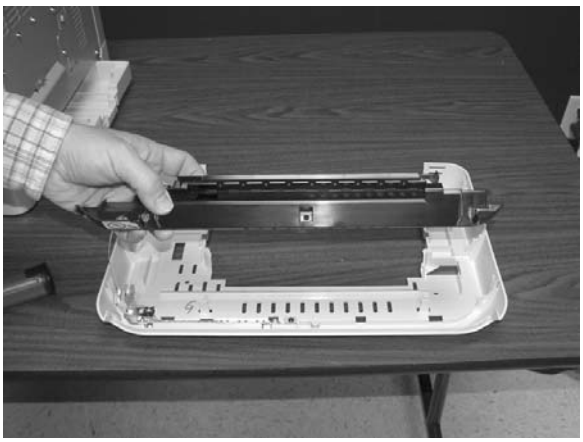

8. Remove two screws from the control panel.

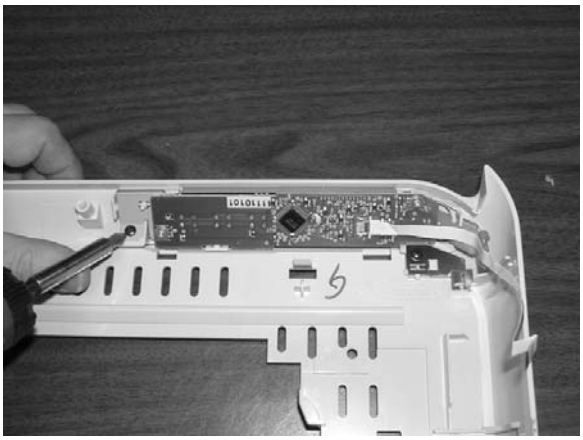

Download Service Manual And Resetter Printer at http://printer1.blogspot.com

9. Remove the control-panel assembly (RM1–1861–000CN).

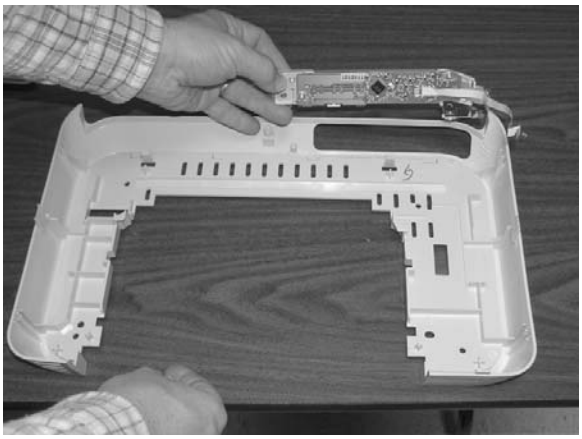

To replace the control panel, follow steps 1 through 9 above in reverse order.

NOTE When replacing the right cover, align the tabs on the upper edge of the right cover and lower edge of the face-down cover with their respective slots.

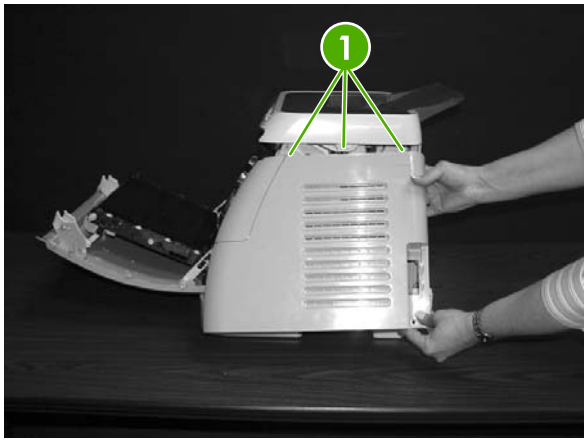

1	Tabs

Download Service Manual And Resetter Printer at http://printer1.blogspot.com

Memory-card assembly removal and replacement

Use the following procedure to remove the memory-card assembly.

1. Remove two screws (1) from the right cover assembly.

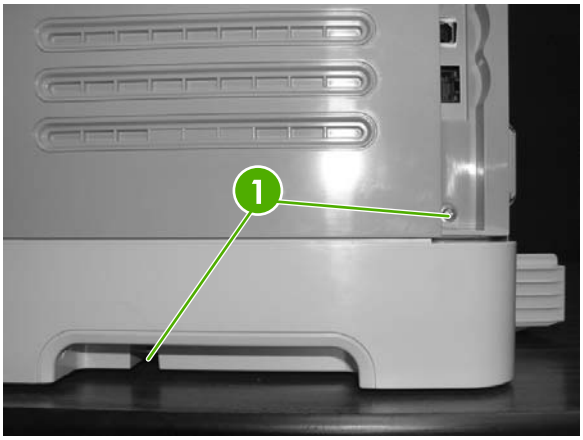

2. Remove the paper-delivery-tray assembly (RM1–1859–000CN).

3. Open the front door.

Download Service Manual And Resetter Printer at http://printer1.blogspot.com

4. Remove the right-cover assembly (RM1–1860–000CN), carefully twisting the front edges of the side covers outward to remove.

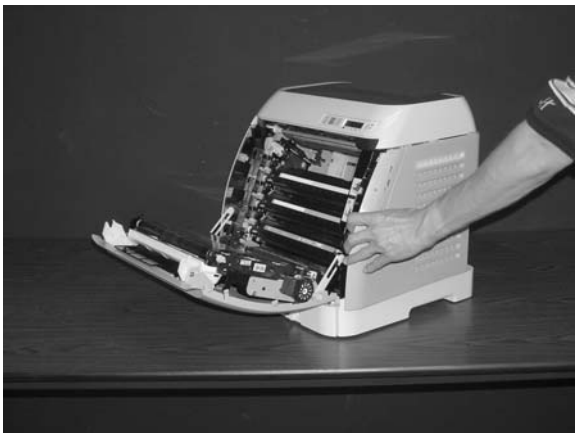

5. Unplug the control-panel cable.

6. Open the upper face cover.

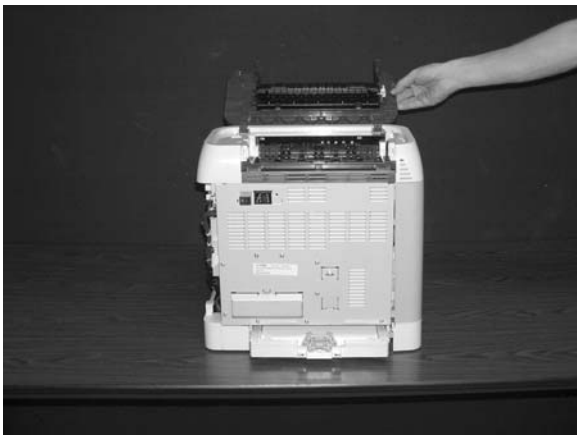

Download Service Manual And Resetter Printer at http://printer1.blogspot.com

7. Remove the four screws anchoring the upper cover to the printer.

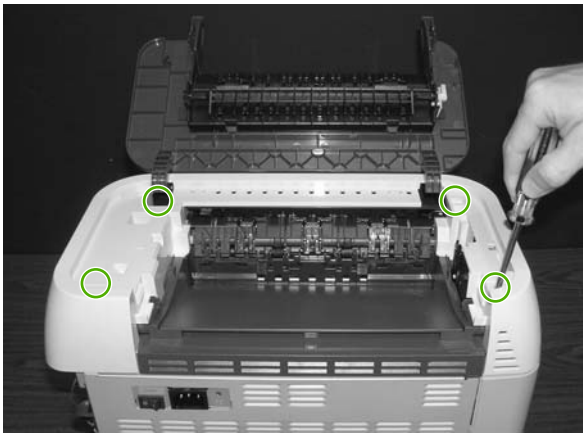

8. Remove the upper cover.

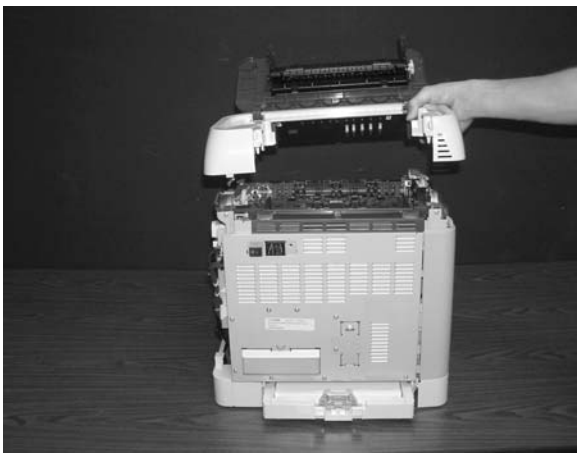

9. Remove the two upper screws attaching the inside right cover to the printer.

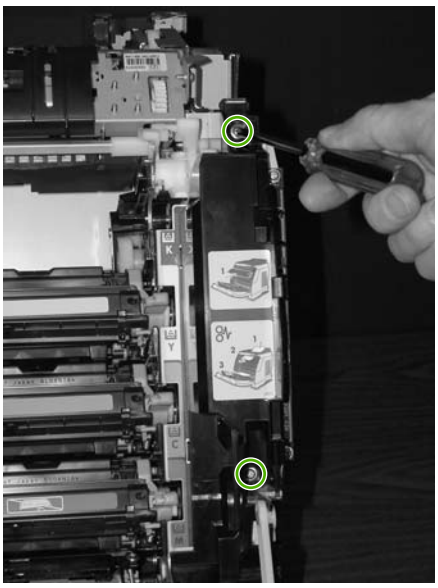

Download Service Manual And Resetter Printer at http://printer1.blogspot.com

10. Close the ETB.

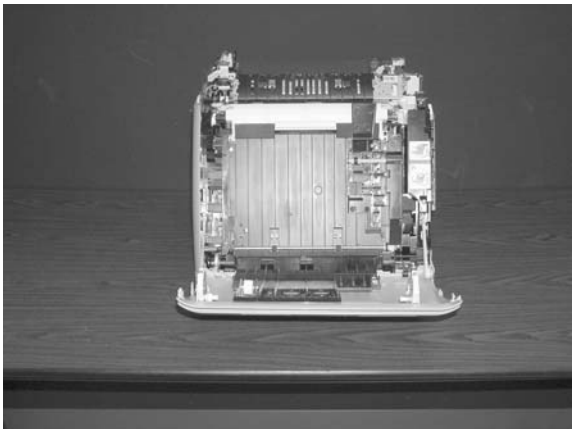

11. Remove the lower screw attaching the inside right cover to the printer.

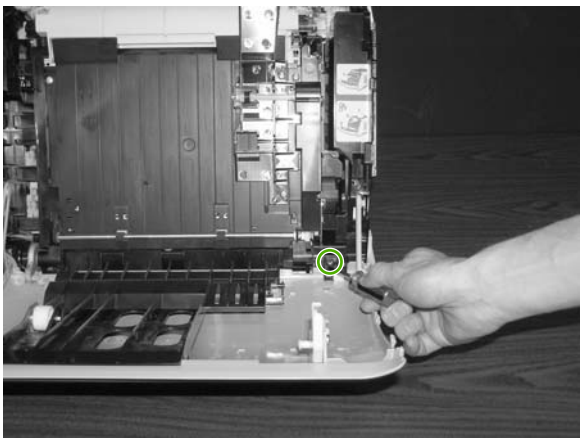

12. Open the ETB approximately a quarter of the way, and then gently remove the inside right cover and let it rest on the back of the front door.

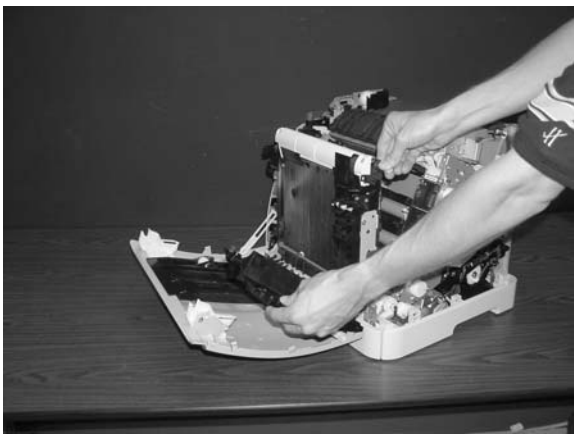

Download Service Manual And Resetter Printer at http://printer1.blogspot.com

13. Unplug the flat flex cable from the memory-card assembly.

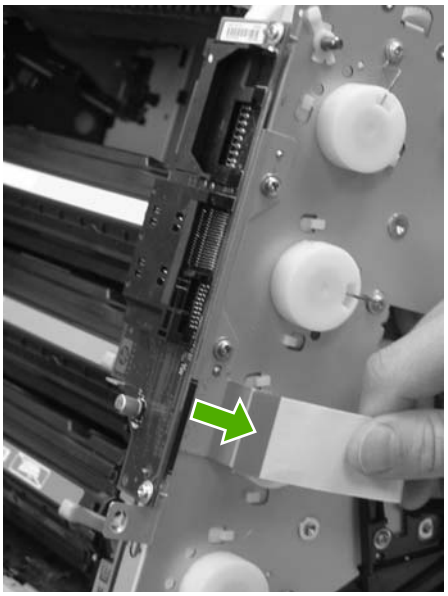

14. Remove two screws attaching the memory-card assembly to the printer.

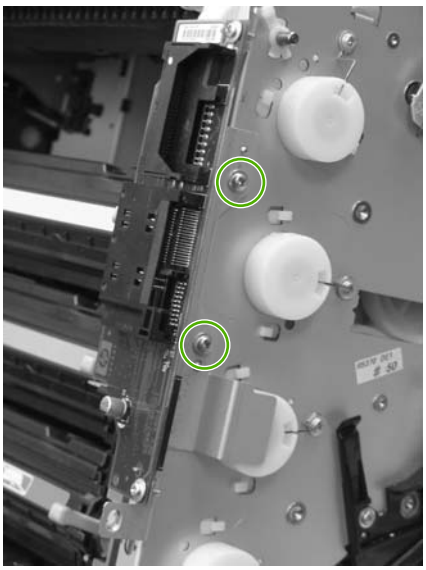

15. Remove the memory-card assembly.

To replace the memory-card assembly, follow steps 1 through 15 above in reverse order.

NOTE When replacing the right cover, align the tabs on the upper edge of the right cover (1) and lower edge of the face-down cover with their respective slots.

Download Service Manual And Resetter Printer at http://printer1.blogspot.com

Duplexing drive unit removal and replacement

Use the following procedure to replace the duplexing drive unit.

1. Remove two screws (1) from the right cover assembly.

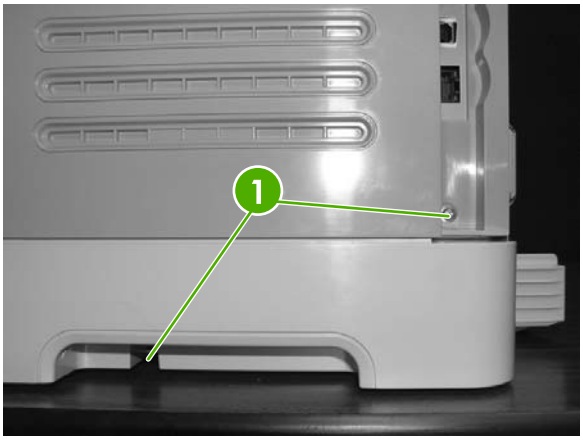

2. Remove the paper-delivery-tray assembly (RM1–1859–000CN).

3. Open the front door.

Download Service Manual And Resetter Printer at http://printer1.blogspot.com

4. Remove the right-cover assembly (RM1–1860–000CN), carefully twisting the front edges of the side covers outward to remove.

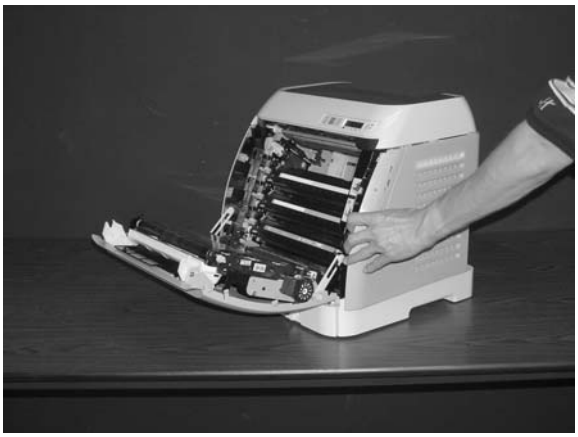

5. Unplug the control-panel cable.

6. Open the upper face cover.

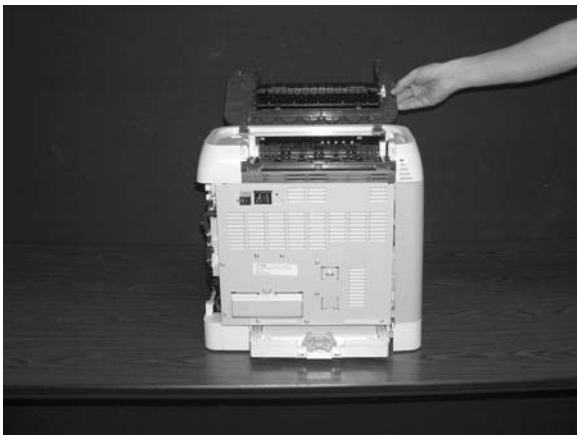

Download Service Manual And Resetter Printer at http://printer1.blogspot.com

7. Remove the four screws that anchor the upper cover to the printer.

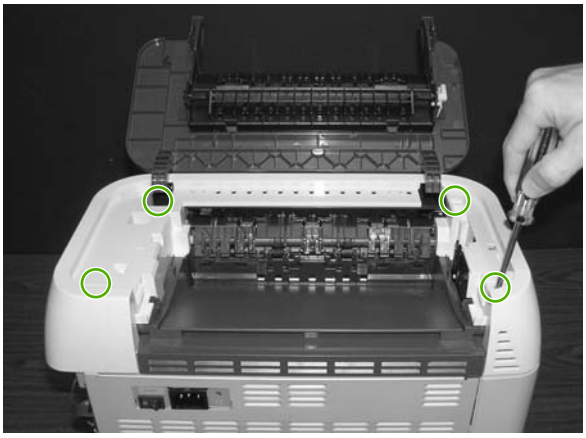

8. Remove the upper cover.

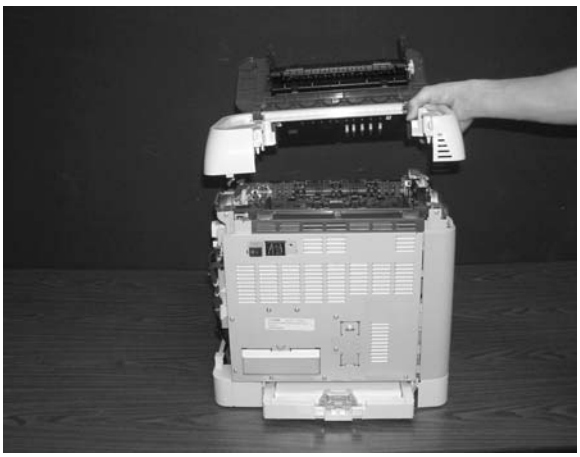

9. Remove one screw (1) from the left-cover assembly.

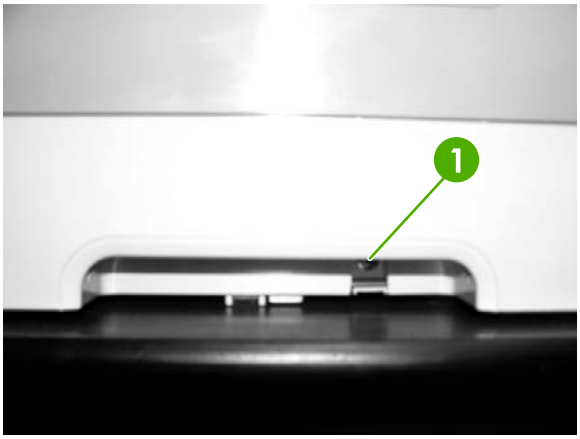

Download Service Manual And Resetter Printer at http://printer1.blogspot.com

10. Unhook the two upper claws (1) on the front edge of the left cover assembly.

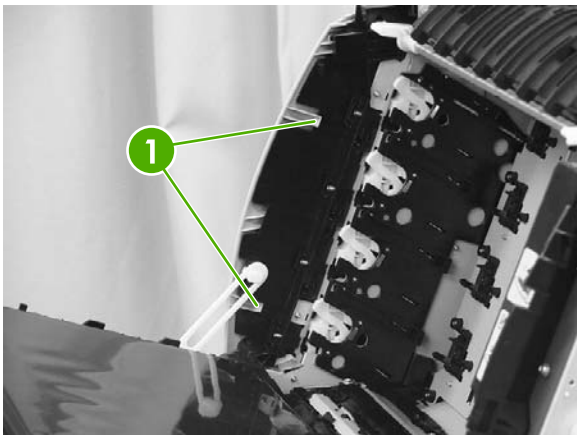

11. Unhook the lowest claw (1) on the front edge of the left cover, and then remove the left cover (2) and left cassette cover (3) together.

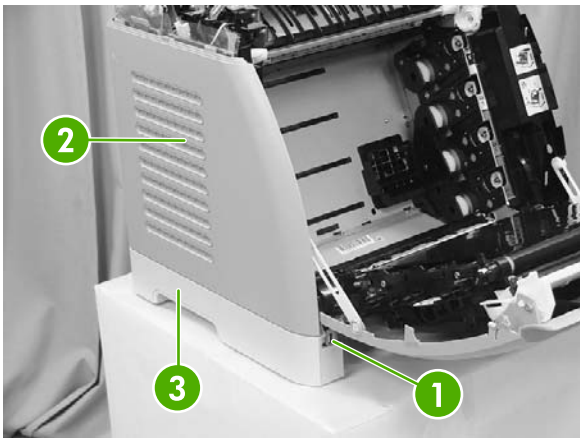

12. Close the front door.

13. Unplug the three lower PCA connectors (1).

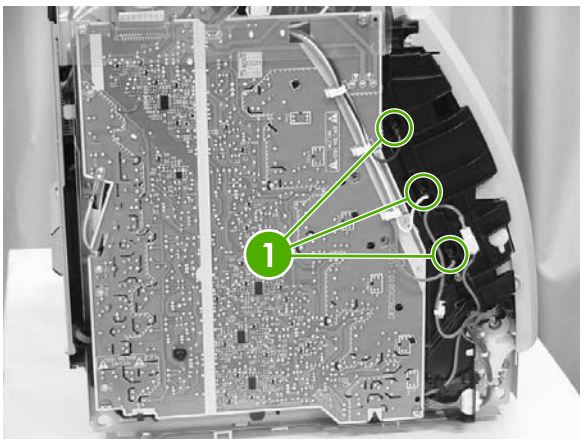

Download Service Manual And Resetter Printer at http://printer1.blogspot.com

14. Unplug the three upper PCA connectors (1).

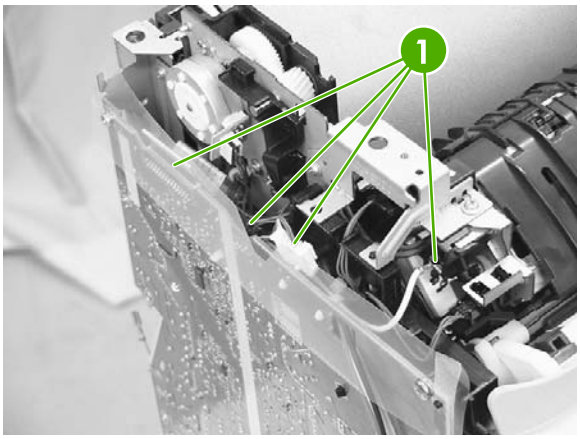

15. Remove the screw with washer (1) and the three tapping screws (2) that anchor the PCA to the printer.

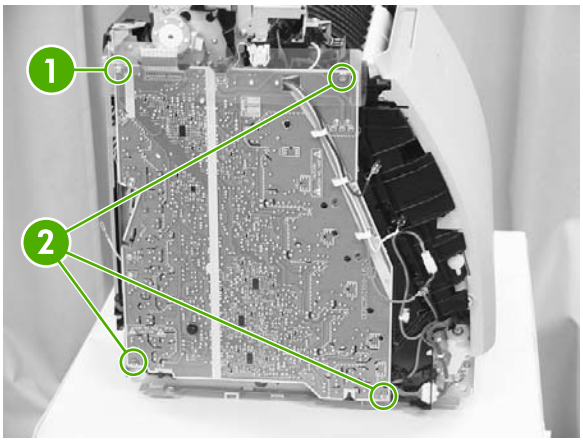

16. Unhook the three claws (1) and remove the high-voltage power supply PCA (2).

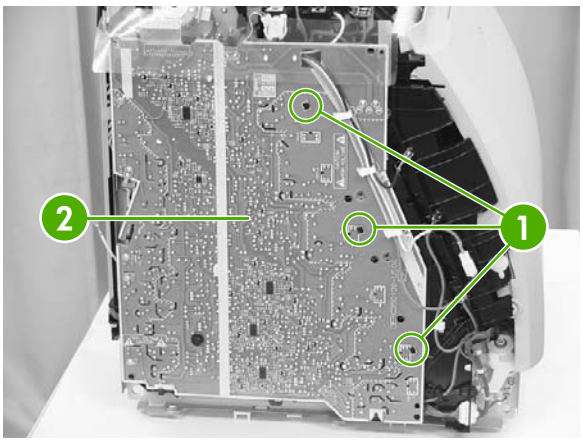

Download Service Manual And Resetter Printer at http://printer1.blogspot.com

17. Remove two screws (1) and take out the metal plate (2).

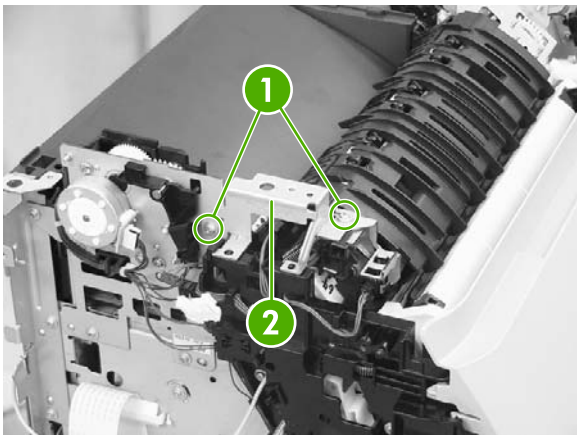

18. Unplug three connectors (1), remove three screws (2), and remove the duplexing drive unit (3) from the printer.

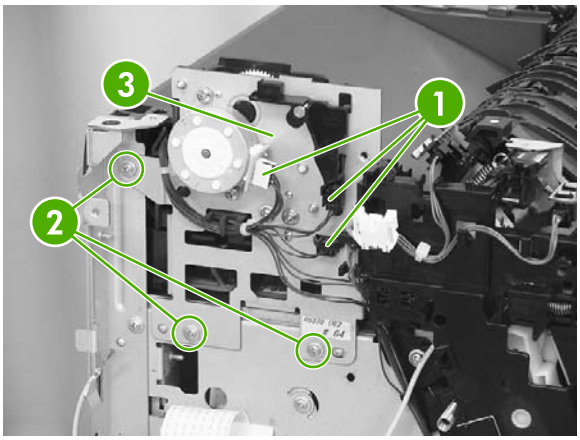

Duplexing-driver PCA removal and replacement

Use the following procedure to replace the duplexing-driver PCA.

1. Remove two screws (1) from the right-cover assembly.

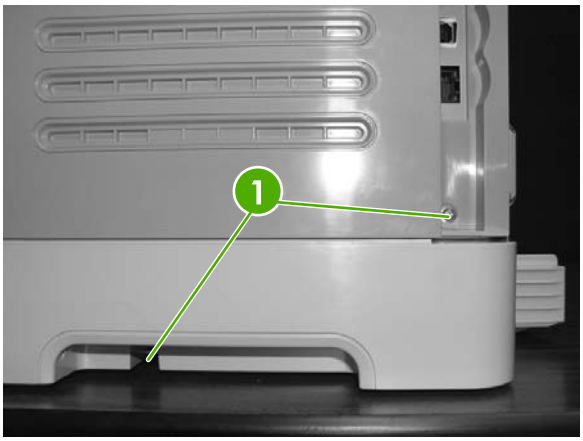

Download Service Manual And Resetter Printer at http://printer1.blogspot.com

2. Remove the paper delivery tray assembly (RM1–1859–000CN).

3. Open the front door.

4. Remove the right-cover assembly (RM1–1860–000CN), carefully twisting the front edges of the side covers outward to remove.

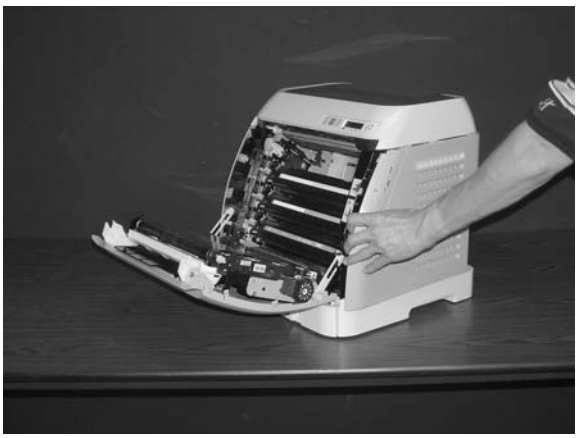

5. Unplug two connectors (1), remove two screws (2), and remove the duplexing-driver unit (3).

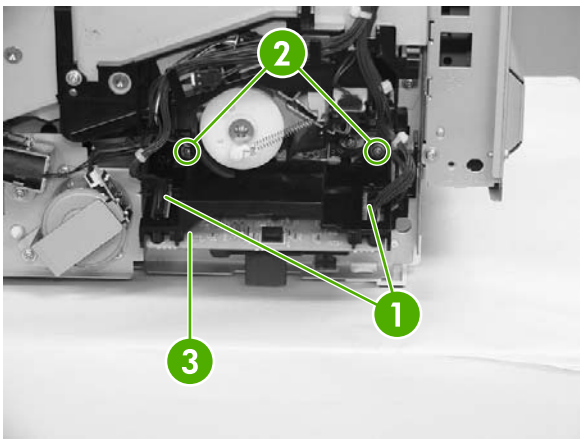

Download Service Manual And Resetter Printer at http://printer1.blogspot.com

6. Remove two screws (1) and take out the duplexing-driver PCA (2).

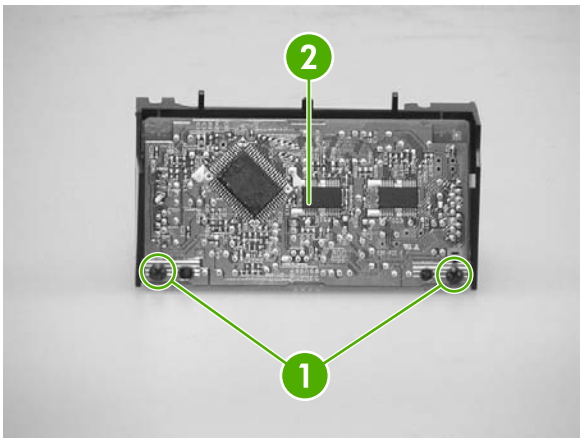

Download Service Manual And Resetter Printer at http://printer1.blogspot.com

Download Service Manual And Resetter Printer at http://printer1.blogspot.com

6 Troubleshooting

This troubleshooting information is organized to help you resolve printing problems. Choose the general topic or type of problem from the following list.

- Troubleshooting process
- Control-panel messages
- Clearing jams
- E-Label reader guide pin damage
- Print problems
- Functional tests (SERVICE ONLY)
- Service mode functions (SERVICE ONLY)
- Troubleshooting tools
- HP ToolboxFX
- Diagnostic resources
- Repetitive-image-defect ruler
- Firmware and software updates

Download Service Manual And Resetter Printer at http://printer1.blogspot.com

Troubleshooting process

Use the troubleshooting checklist to solve issues with the device.

Troubleshooting checklist

Follow the steps below when trying to solve a problem with the device.

Download Service Manual And Resetter Printer at http://printer1.blogspot.com

Table 6-1 Troubleshooting checklist

Step number	Verification step	Possible problems	Solutions
1	**Is the power on?** When the device is connected to a grounded power source, the control panel shows **Hewlett-Packard** with both the Ready and Attention lights blinking. The control panel will then display **Initializing** and then **Ready**, at which time only the green light will be on.	No power due to failed power source, cable, switch, or fuse.	1. Verify that the device is plugged in. 2. Verify that the power cable is functional and that the power switch is on. 3. Check the power source by plugging the device directly into the wall or into a different outlet. 4. Test the outlet or connect another device to the outlet to verify that the outlet is functioning.
2	**Does Ready appear in the device control panel?** The control panel should function without error messages.	Control panel shows an error.	See Control-panel messages on page 136 for a list of common messages that will help you correct the error.
3	**Do information pages print?** Print a Configuration page.	Control panel displays an error message.	See Control-panel messages on page 136 for a list of common messages that will help you correct the error.
		Media does not move smoothly through the device paper path.	Clean the paper path.
		Poor print quality.	For information, see General print quality issues on page 154.
4	**Does the device print from the computer?** Connect the network cable or USB cable to the device and the computer. Use a word-processing application to send a print job to the device.	Software is not installed correctly or an error occurred during software installation.	Uninstall and then reinstall the device software. Verify that you are using the correct installation procedure and the correct port setting.
		The cable is not connected correctly.	Reconnect the cable.
		An incorrect driver is selected.	Select the proper driver.
		Other devices are connected to the USB port.	Disconnect the other devices and try again to print.
		There is a port driver problem in Microsoft Windows.	Uninstall and then reinstall the device software. Verify that you are using the correct installation procedure and the correct port setting.
		If the error persists, see the support flyer that came in the device box.	

Download Service Manual And Resetter Printer at http://printer1.blogspot.com

Control-panel messages

The majority of the control-panel messages are intended to guide the user through typical operation. The control-panel messages indicate the status of the current operation, and include a page count on the second line of the display, if appropriate. When the device is printing data, control-panel messages indicate this status. In addition, alert messages, warning messages, and critical error messages indicate situations that might require some action.

Alert and warning messages

Control panel message	Description	Recommended action
One of the following messages may display: **Incorrect black** **Incorrect cyan** **Incorrect magenta** **Incorrect yellow**	The <color> print cartridge not installed correctly.	Reinstall the <color> print cartridge.
One of the following messages may display: **Install black cartridge** **Install cyan cartridge** **Install magenta cartridge** **Install yellow cartridge** The supplies gauge will display the consumption levels of print cartridges.	The out threshold has been reached.	The supply must be replaced before printing can continue.
One of the following messages may display: **Non HP black** **installed** **Non HP cyan** **installed** **Non HP magenta** **installed** **Non HP yellow** **installed** alternates with **To accept** **Press ✓**	A non-HP <color> cartridge is installed.	**NOTE** Any printer repair required as a result of using a non-HP or unauthorized supply is not covered under warranty. To use this cartridge, override by pressing the (Select) button on the control panel.
One of the following messages may display: **Order black**	The <color> print cartridge low threshold has been reached.	For more information go to the HP Color LaserJet 2605 Series toolbox and click **Supplies Status**. To order supplies online, click **Order Supplies**.

Download Service Manual And Resetter Printer at http://printer1.blogspot.com

Control panel message	Description	Recommended action
cartridge, **Order cyan** **cartridge**, **Order magenta** **cartridge**, or **Order yellow** **cartridge** alternates with **Ready** The supplies gauge will display the consumption levels of print cartridges.		
One of the following messages may display: **Replace black cartridge** **Replace cyan cartridge** **Replace magenta cartridge** **Replace yellow cartridge**	The cartridge threshold has been reached.	The supply must be replaced before printing can continue.
One of the following messages may display: **Unauthorized yellow** **Unauthorized magenta** **Unauthorized cyan** **Unauthorized black**	A new supply has been installed that is not made by HP. One of these four messages is displayed until an HP supply is installed or (Select) is pressed.	If you believe you purchased an HP supply, please call the HP fraud hotline at 1-877-219-3183. Service or repairs required as a result of using non-HP supplies is not covered under HP warranty. To continue printing, press (Select).
10.000x Supply error	E-label cannot be read or print cartridge is not properly installed. 10.0000 = Black print cartridge 10.0001 = Cyan print cartridge 10.0002 = Magenta print cartridge 10.0003 = Yellow print cartridge	1. Remove the print cartridge and verify that the E-label reader guide pin is not broken. See Print cartridge replacement on page 86 or E-Label reader guide pin damage on page 150 for more information on the E-label reader guide pin. 2. Reinstall print cartridge. 3. Turn on the printer. 4. If the problem is not solved, replace the cartridge.
10.100x Supply error alternates with **Reinstall** The supplies gauge will display the consumption levels of print cartridges.	A print cartridge is missing. 10.1000 = Black print cartridge 10.1001 = Cyan print cartridge 10.1002 = Magenta print cartridge 10.1003 = Yellow print cartridge	Install the correct print cartridge.

Download Service Manual And Resetter Printer at http://printer1.blogspot.com

Control panel message	Description	Recommended action
50.1 Fuser Error **50.2 Fuser Error** **50.3 Fuser Error**	The device has experienced an internal hardware error. **50.1 Fuser Error**—low temperature **50.3 Fuser Error**—slow fuser **50.2 Fuser Error**—high temperature	Turn off the device, wait at least 25 minutes, and then turn on the device. If a surge protector is being used, remove it. Plug the device directly into the wall socket. Use the power switch to turn on the device. If this does not clear the error, replace the fuser.
51.20 Error **51.21 Error** **51.22 Error** **51.23 Error**	The device has experienced an internal hardware error. **51.20 Error**—black scanner error **51.21 Error**—cyan scanner error **51.22 Error**—magenta scanner error **51.23 Error**—yellow scanner error	Turn off the power by using the power switch, wait at least 30 seconds, and then turn on the power and wait for the device to initialize. If a surge protector is being used, remove it. Plug the device directly into the wall socket. Use the power switch to turn the device on. Laser scanners are not replaceable. Replace the engine.
55.1 Error	DC controller error. The device has experienced an internal hardware error.	Turn off the power by using the power switch, wait at least 30 seconds, and then turn on the power and wait for the device to initialize. If a surge protector is being used, remove it. Plug the device directly into the wall socket. Use the power switch to turn the device on. Check the engine (DCC) firmware version. Update if needed. Replace the DCC if a firmware upgrade does not resolve the issue.
57 Fan Error **Turn off then on**	The device has experienced a problem with its internal fan.	Turn off the power by using the power switch, wait at least 30 seconds, and then turn on the power and wait for the device to initialize. The fan is not replaceable. Replace the engine.
Calibrating...	The printer is calibrating.	No action is required.
Cleaning...	The printer is in cleaning mode.	No action is required.
Device error **Press ✓**	An internal error occurred in the device.	Press (Select) to resume the job.
Door open	The printer door is open.	The door must be closed before printing can continue.
Engine comm. **error**	The device experienced an internal communication error.	This is a warning message only. Job output might be affected.
HP supplies **installed**	The printer transitioned from having one or more non-HP supplies to having all HP supplies installed.	No action required.

Download Service Manual And Resetter Printer at http://printer1.blogspot.com

Control panel message	Description	Recommended action
Install supplies The supplies gauge will display the consumption levels of print cartridges.	Multiple supplies are not installed.	Install correct print cartridges.
Invalid driver	You are using the incorrect printer driver.	Reselect the printer driver appropriate for your device.
Invalid entry	Invalid data or response.	Correct the entry.
Jam in **Cartridge area**	A jam has occurred in the print path.	Open the door and clear the jam. Then press the (Select) button on the control panel.
Jam in **Output bin**	A jam has occurred in the output area.	Clear the jam, and then press the (Select) button on the control panel.
Jam in **print paper path**	A jam has occurred in the print path.	Open the door and clear the jam. Then press the (Select) button on the control panel.
Jam in **tray 2**	A jam has occurred in Tray 2.	Clear the jam, and then press the (Select) button on the control panel.
Jam in **tray 3**	A jam has occurred in Tray 3.	Clear the jam, and then press the (Select) button on the control panel.
Load paper	The HP Color LaserJet 2605, 2605dn, or 2605dtn printer is out of paper.	Please load specified paper type into the tray indicated.
Load Tray X **[TYPE] [SIZE]**	The printer is processing job, but the tray indicated is empty.	Please load specified paper type and size into the tray indicated.
Manual feed **Press ✓**	The printer is waiting for paper in the tray indicated.	Load the paper as indicated.
Memory is low **Press ✓**	The device memory has been almost completely filled.	Allow the device to finish the job, or press (Select) to cancel the job. Break the job into smaller jobs that contain fewer pages.
Misprint **Press ✓**	The printed pages have been incorrectly placed on the paper.	To continue, press the (Select) button on the control panel.
No paper pickup **Press ✓**	The print engine has failed to pick up a piece of media.	In Tray 1, verify that the media was inserted far enough into the tray. In Tray 2 or optional Tray 3, verify that the paper-length guide is in the correct position for the media size that you are using. Reload the media in the input tray and press (Select) to continue the job.
Non HP supply	A non-HP (cloned or refilled) supply has been installed and was overridden.	If you believe you purchased an HP supply, please call the HP fraud hotline at

Download Service Manual And Resetter Printer at http://printer1.blogspot.com

Control panel message	Description	Recommended action
in use alternates with **Ready** The supplies gauge will display the consumption levels of print cartridges.		1-877-219-3183. Service or repairs required as a result of using non-HP supplies is not covered under HP warranty.
ORDER SUPPLIES alternates with **Ready** The supplies gauge will display the consumption levels of print cartridges.	Multiple supplies are low.	For more information go to the HP Color LaserJet 2605 Series toolbox and click **Supplies Status**. To order supplies online, click **Order Supplies**.
Replace Supplies The supplies gauge will display the consumption levels of print cartridges.	The cartridge threshold has been reached.	The supply must be replaced before printing can continue.
Replace supplies **Override in use** alternates with **Ready** The supplies gauge will display the consumption levels of print cartridges.	Supply override in use. The user has decided to continue printing beyond the out point. A supply is low and using Override may result in unsatisfactory print quality.	Replace the supply that is low.
Replace supply. **Override in use** alternates with **Ready** The supplies gauge will display the consumption levels of print cartridges.	Supply override in use. The user has decided to continue printing beyond the out point. A supply is low and using Override may result in unsatisfactory print quality.	Replace the supply that is low.
Unauthorized **supply in use** alternates with **Ready** The supplies gauge will display the consumption levels of print cartridges.	A new non-HP supply has been installed and was overridden.	If you believe you purchased an HP supply, please call the HP fraud hotline at 1-877-219-3183. Service or repairs required as a result of using non-HP supplies is not covered under HP warranty.
Unexpected size **in tray X**	Unexpected paper size error. The media size loaded in the tray does not match the media size configured for the tray.	Verify that the print settings are set to the specified media in the tray.

Status-log messages

The following messages are not displayed on the control panel. They are printed on the Status log.

Download Service Manual And Resetter Printer at http://printer1.blogspot.com

Table 6-2 Status-log messages

Error-log code	Description
54.06	Color density sensor error
54.10	Color-plane registration sensor(s) error
54.11	Yellow density out of range
54.12	Magenta density out of range
54.13	Cyan density out of range
54.14	Black density out of range

Download Service Manual And Resetter Printer at http://printer1.blogspot.com

Clearing jams

Occasionally, paper or other print media can become jammed during a print job. Some causes include the following events:

- The input trays are loaded improperly or overfilled.
- Tray 2 or optional Tray 3 is opened during a print job.
- Too many sheets accumulated in the output area or sheets blocked the output area.
- The print media that is being used does not meet HP specifications. See Print-media specifications on page 9.
- The environment in which the print media was stored is too humid or too dry. See Print-media specifications on page 9.

Where to look for jams

Jams can occur in these locations:

- Inside the printer. See To clear jams from inside the printer on page 143.
- In input areas. See To clear jams from Tray 2 or optional Tray 3 on page 149.
- In the output area. See To clear jams from the top bin (HP Color LaserJet 2605) on page 146.

Find and remove the jam by using the instructions on the following pages. If the location of the jam is not obvious, first look inside the printer.

Loose toner might remain in the printer after a jam. This problem should resolve itself after a few sheets have been printed.

Each of the following sections correspond to an area where a jam could occur. Use the following procedures to clear the jam. In all cases, grasp the jammed media by both corners and pull slowly to remove it.

Download Service Manual And Resetter Printer at http://printer1.blogspot.com

To clear jams from inside the printer

CAUTION Jams in this area might result in loose toner on the page. If you get toner on your clothes or hands, wash them in cold water. (Hot water will set the toner into the fabric.)

1. Open the front door.

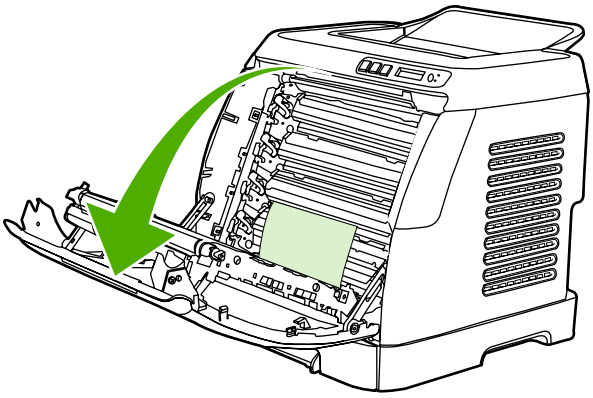

CAUTION Do not place anything on the transfer belt, which is located on the inside of the front door. Otherwise, the printer may be damaged, adversely affecting print quality.

2. Carefully grasp the jammed page by both corners and pull slowly to remove the paper.

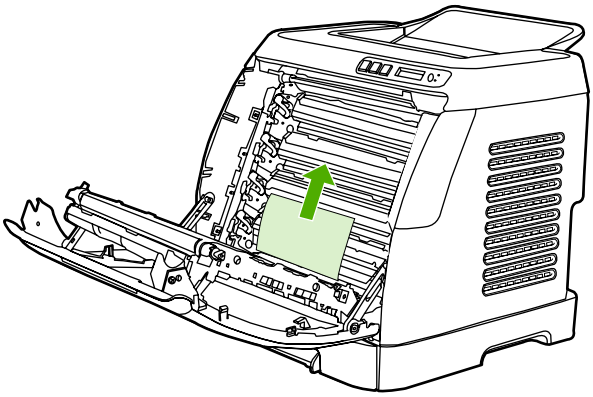

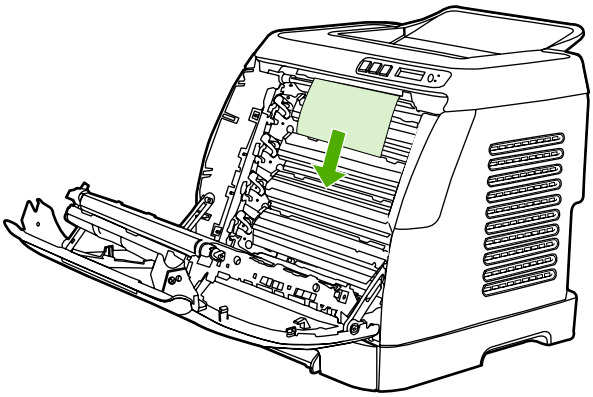

Download Service Manual And Resetter Printer at http://printer1.blogspot.com

3. Close the front door.

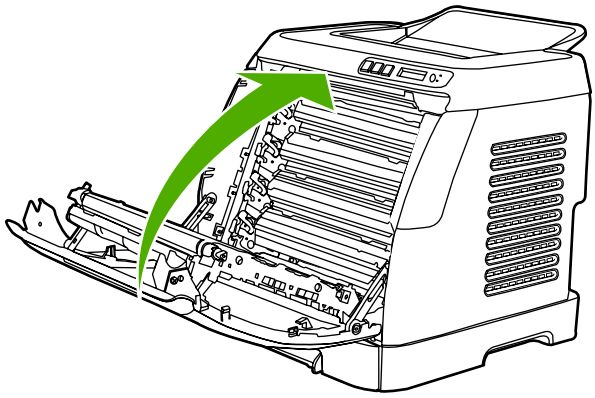

To clear jams from the duplex area (HP Color LaserJet 2605dn and 2605dtn models only)

1. Open the front door completely.

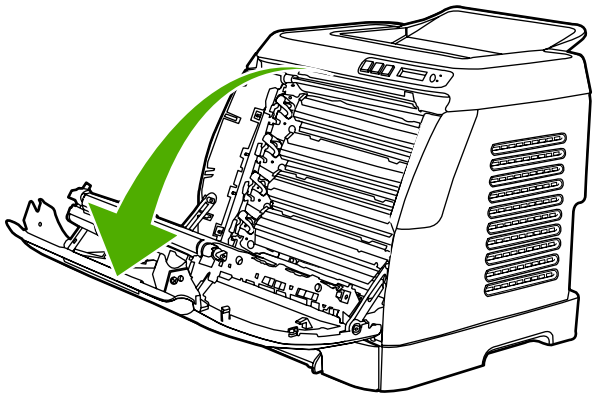

CAUTION Do not place anything on the transfer belt, which is located on the inside of the front door. Otherwise, the printer may be damaged, adversely affecting print quality.

2. Lift the ETB

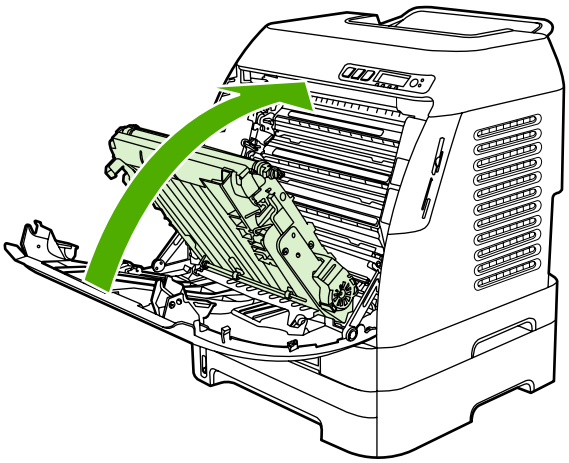

Download Service Manual And Resetter Printer at http://printer1.blogspot.com

3. Remove any jammed media.

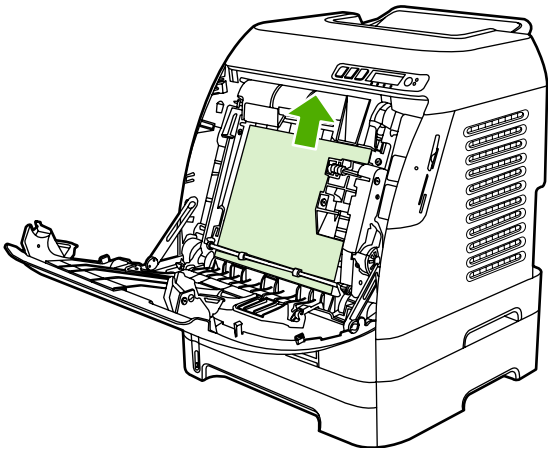

4. Close the ETB.

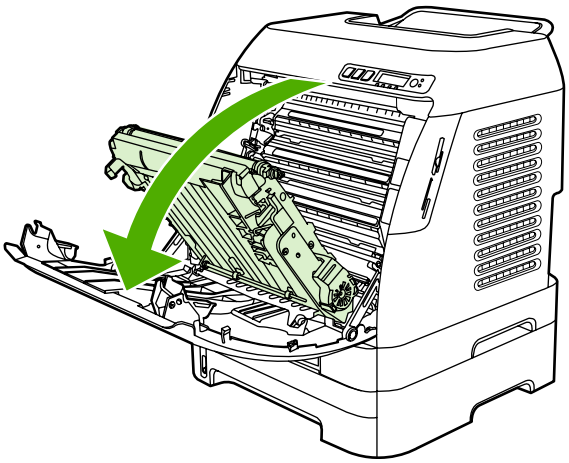

5. Close the front door.

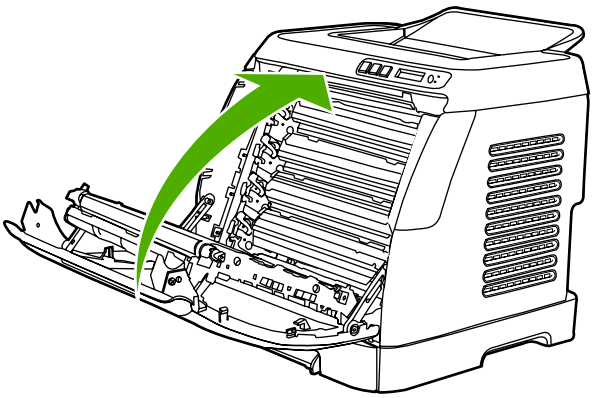

Download Service Manual And Resetter Printer at http://printer1.blogspot.com

To clear jams from the top bin (HP Color LaserJet 2605)

CAUTION Jams in these areas might result in loose toner on the page. If you get toner on your clothes or hands, wash them in cold water. (Hot water will set the toner into the fabric.)

1. Carefully grasp the jammed page by both corners and pull slowly to remove the paper from the top bin.

2. Open and close the front door.

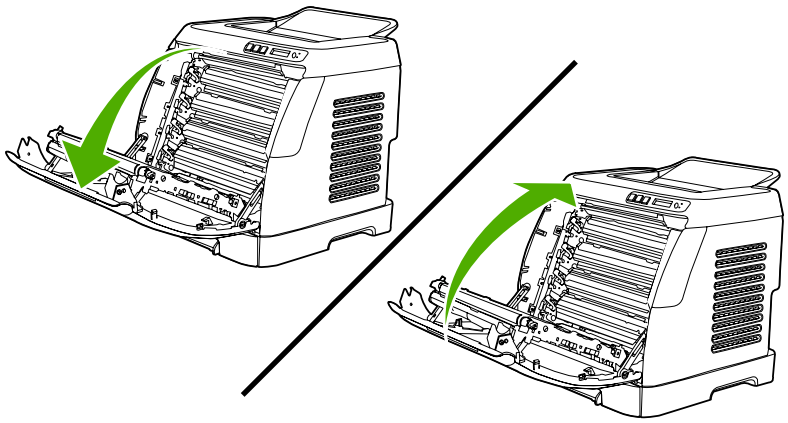

Download Service Manual And Resetter Printer at http://printer1.blogspot.com

To clear jams from the top output area (HP Color LaserJet 2605dn and 2605dtn models only)

1. Grip the top cover.

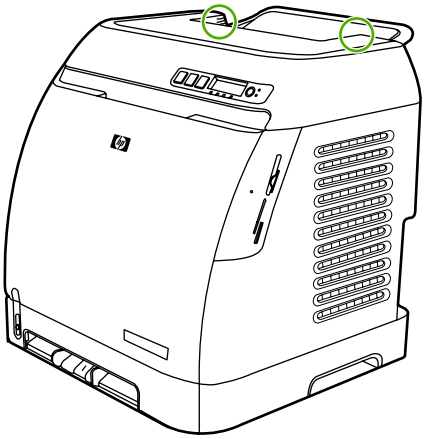

2. Open the top cover.

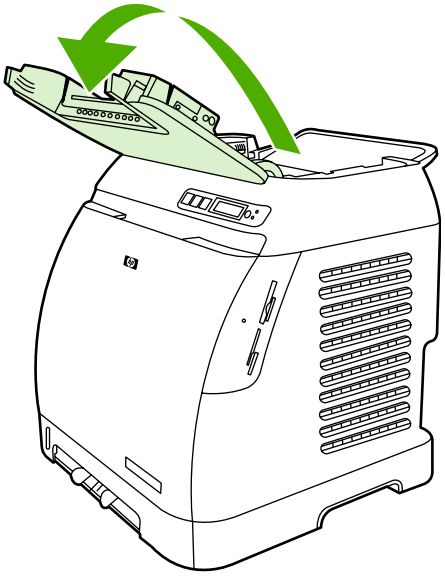

Download Service Manual And Resetter Printer at http://printer1.blogspot.com

3. Remove any jammed media.

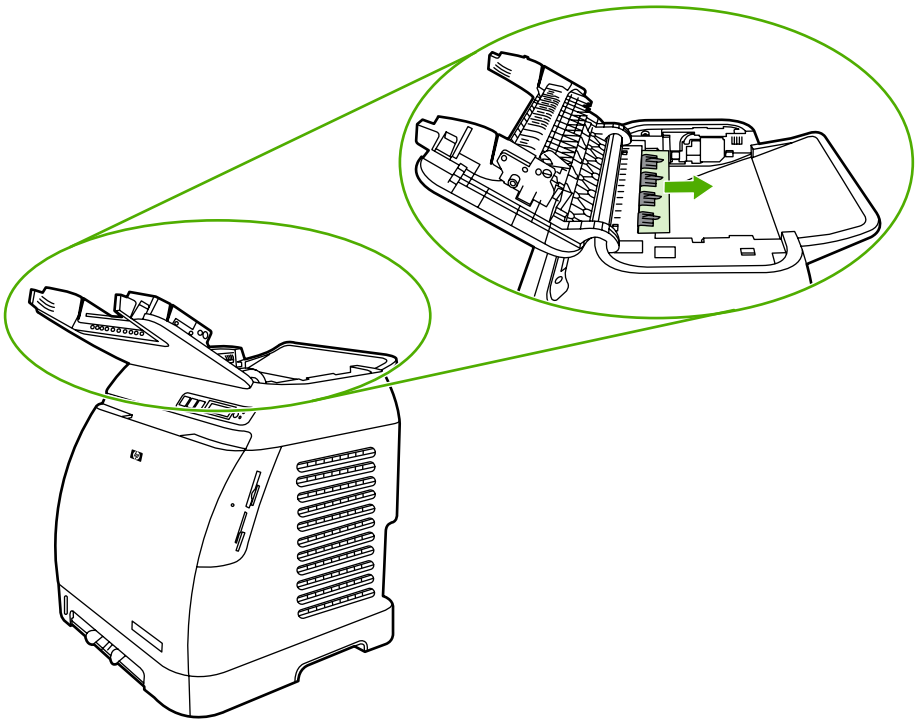

4. Close the top cover.

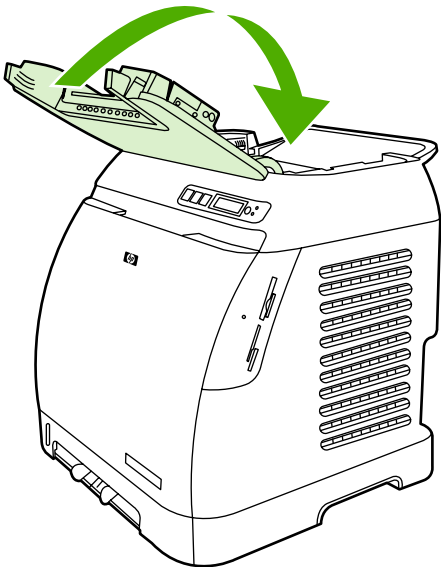

Download Service Manual And Resetter Printer at http://printer1.blogspot.com

To clear jams from Tray 2 or optional Tray 3

NOTE Before attempting to clear jams from Tray 2 or optional Tray 3, remove any jams inside the printer.

1. Pull Tray 2 or optional Tray 3 out of the printer.

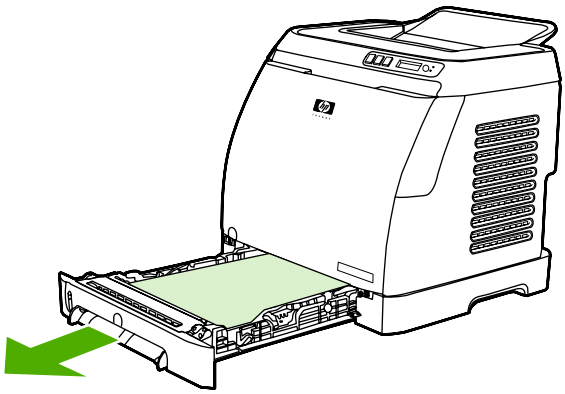

2. Carefully grasp the jammed page by both corners and pull slowly to remove it.
3. Slide the tray into the printer.

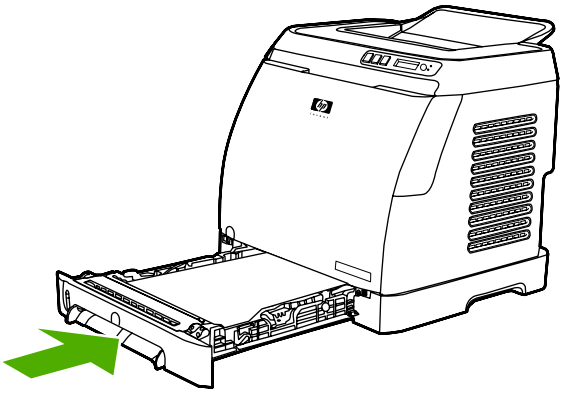

4. Open and close the front door.

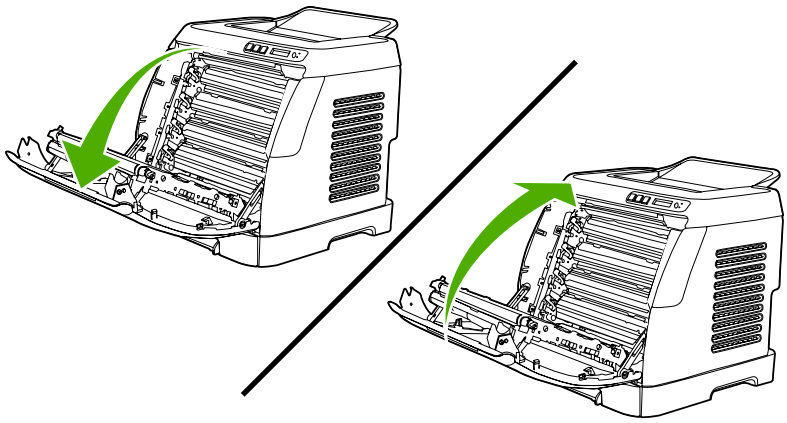

Download Service Manual And Resetter Printer at http://printer1.blogspot.com

E-Label reader guide pin damage

When installing a print cartridge, be sure to insert the cartridge straight into the cartridge guides.

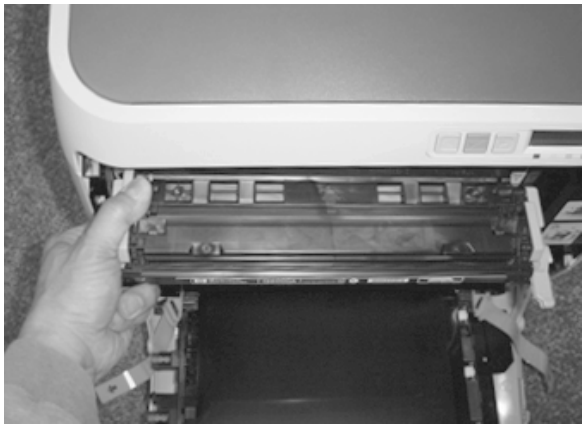

Installing the cartridge at an angle can damage or break the E-label reader guide pin.

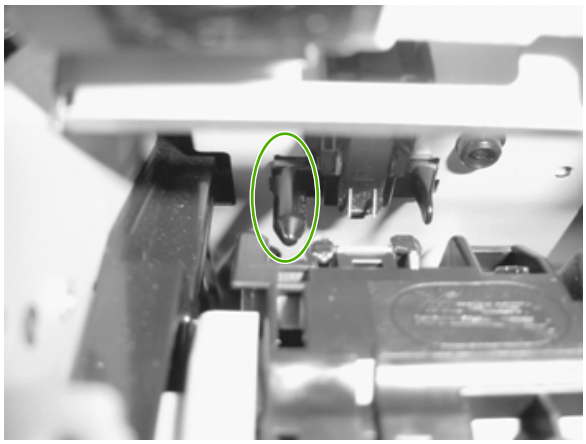

Figure 6-1 E-label reader guide pin

If the E-label reader guide pin is damaged or broken, the control panel displays a 10.00X supply error. No service parts are available for the E-label assembly, so a whole-unit replacement or exchange is required. See Table 7-1 Replaceable parts on page 178 for replacement-unit and refurbished-unit part numbers.

Download Service Manual And Resetter Printer at http://printer1.blogspot.com

Print problems

Printed image quality problems

Improving print quality

Use the print-quality settings in the HP ToolboxFX to improve print-quality problems. To access the HP ToolboxFX, see HP ToolboxFX on page 171. The following menus contain paper type, print mode, and print-quality settings. To restore the default settings, open the HP ToolboxFX and click **Device Settings**. Then click **Settings**, **Service**, and in **Restore Factory Settings**, click **Restore**.

Paper Types menu

The purpose of this menu is to specify the print mode for paper types which are non-specific.

To make changes in the **Paper Types** menu, make the desired selections and click **Apply**.

Table 6-3 Print modes for paper types

Print Modes for paper types	Weight	Default media types
Normal mode	75-89 g/m^2	Plain, color, preprinted, prepunched, recycled
Transparency		Transparencies
Labels		Labels
Light	75-89 g/m^2	Light
Heavy	90-105 g/m^2	Heavy
Cardstock	106-163 g/m^2	Cardstock, bond
Light Glossy	75-105 g/m^2	Light Glossy
Glossy	106-120 g/m^2	Glossy
Heavy Glossy	121-163 g/m^2	Heavy Glossy
HP Tough paper		HP Tough paper
Envelope		Envelopes

Print Modes menu

Under the **Print Modes** menu in HP ToolboxFX, each media type has a **Fusing** menu, a **Transfer** menu, and a **Toner** menu. Select a setting for each menu item.

Media types are listed with the plain papers together, glossy papers together, and special media at the end. To make changes in the **Print Modes** menu, make the desired selections and click **Apply**.

Table 6-4 Extended print modes

HP ToolboxFX extended print mode	Printer adjustment	Change in printer setting
Paper curl	Fusing adjustment	Reduced fuser temperature for less negative paper curl

Download Service Manual And Resetter Printer at http://printer1.blogspot.com

Table 6-4 Extended print modes (continued)

HP ToolboxFX extended print mode	Printer adjustment	Change in printer setting
Heavy coverage	Fusing adjustment	Increased fuser temperature for less positive paper curl with heavy toner coverage
Toner offset	Fusing adjustment	Reduced fuser temperature for less toner offset
Flap sealing	Fusing adjustment	Reduced fuser temperature to keep envelope flaps from sealing
Less fusing	Fusing adjustment	Reduced fuser temperature
More fusing	Fusing adjustment	Increased fuser temperature
Dry paper	Transfer adjustment	Increased transfer bias for high resistivity paper
Humid paper	Transfer adjustment	Decreased transfer bias for high resistivity paper
Rough paper	Transfer adjustment	Increased transfer bias for high resistivity paper
Less transfer current	Transfer adjustment	Reduced transfer bias
More transfer current	Transfer adjustment	Increased transfer bias
Less toner	Toner adjustment	Tone curve is scaled back so that solid is not 100% halftone

Print quality menu

Under the **Print Quality** menu in HP ToolboxFX, there will be an Optimize section containing a number of On/Off adjustments which will apply to all media types.

Table 6-5 Optimize menu

Adjustment type	Default setting	Extended print mode	Description
Background Toner	Off	EEC95-9	Will reduce the developer DC bias
Extra Cleaning	Off	EEC93-11	Increases rotations of the ETB
Trailing Edge Over? development (full?speed)	Off	EEC95-14	
Trailing Edge Over? development (half?speed)	Off	EEC95-14	
Mottle Prevention	Off	EEC96-12	Will increase the developer DC bias
Less Duplex Transfer Current	Off	EEC68-10 EEC91>16h* EEC92>-1**	Decreases transfer bias on the 2nd side of duplex jobs. For media that has low resistivity after fusing.
More Duplex Transfer Current	Off	EEC68-10	Increases transfer bias on the second side of duplex

Download Service Manual And Resetter Printer at http://printer1.blogspot.com

Table 6-5 Optimize menu (continued)

Adjustment type	Default setting	Extended print mode	Description
		EEC91>16h*	jobs. For media that has high resistivity after fusing.
		EEC92>+1**	

* > means write xxh to bits 11–15

** > means +/-y to bits 9–15

Understanding print-quality settings

Print-quality settings affect how light or dark the print is on the page and the style in which the graphics are printed. You can also use the print-quality settings to optimize the print quality for a specific media type.

You can change the settings in the device properties to accommodate the types of jobs that you are printing. The following settings are available, depending on the printer driver that you are using:

- Draft (600 dpi)
- Normal (Image REt 2400)

NOTE Changing the resolution can change the formatting of your text.

To temporarily change print-quality settings

To change the print-quality settings only for the current software program, open the properties through the **Print Setup** menu in the program that you are using to print.

To change print-quality settings for all future jobs

For Windows 98, Windows 2000, and Windows Me:

1. In the Windows system tray, click **Start**, select **Settings**, and then click **Printers**.
2. Right-click the device icon.
3. Click **Properties** (in Windows 2000, you can also click **Printing Preferences**).
4. Change the settings, and click **OK**.

For Windows XP (Classic view):

1. In the Windows system tray, click **Start**, and then click **Printers and Faxes**.
2. Right-click the device icon.
3. Click **Properties**, or click **Printing Preferences**.
4. Change the settings, and click **OK**.

Identifying and correcting printed image defects

Use the checklist and print-quality issues charts in this section to solve print-quality problems.

Download Service Manual And Resetter Printer at http://printer1.blogspot.com

Print-quality checklist

General print-quality problems can be solved by using the following checklist:

1. Make sure that the paper or print media that you are using meets specifications. Generally, smoother paper provides better results.
2. If you are using a special print media such as labels, transparencies, glossy, or letterhead, ensure that you have printed by type.
3. Print a Configuration page and Supplies Status page at the device.
    - Check the Supplies Status page to see if any supplies are low or empty. No information is provided for non-HP print cartridges.
    - If the pages do not print correctly, the problem is with the hardware.
4. Print a Demo page from the HP ToolboxFX. If the page prints, the problem is with the printer driver.
5. Try printing from a different program. If the page prints correctly, the problem is with the program from which you were printing.
6. Restart the computer and the device and try printing again. If the problem is not resolved, choose one of these options:
    - If the problem is affecting all printed pages, see General print quality issues on page 154.
    - If the problem is affecting only pages printed in color, see Solving issues with color documents on page 158.

General print quality issues

The following examples depict letter-size paper that has passed through the device short-edge-first. These examples illustrate problems that would affect all of the pages that you print, whether you print in color or in black only. The topics that follow list the typical cause and solution for each of these examples.

Table 6-6 General print quality issues

Problem	Cause	Solution
Print is light or faded. 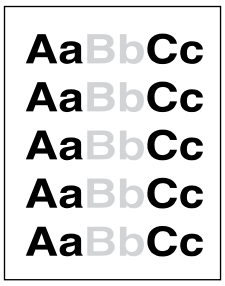	The media might not meet HP specifications.	Use media that meets HP specifications.
	One or more print cartridges might be low. If you are using non-HP print cartridges, no messages appear on the device control panel or in the HP ToolboxFX.	Replace any low print cartridges. If none of the print cartridges is low or empty, remove the print cartridges one at a time and inspect the toner roller in each to see if the roller is damaged. If so, replace the print cartridge.
		Print the Supplies Status page to check the remaining life.

Download Service Manual And Resetter Printer at http://printer1.blogspot.com

Table 6-6 General print quality issues (continued)

Problem	Cause	Solution
Toner specks appear. 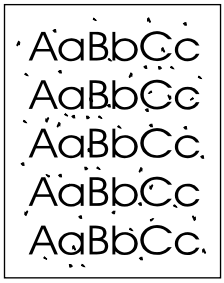	The media might not meet HP specifications.	Use media that meets HP specifications.
	The paper path might need cleaning.	Clean the paper path. See the HP ToolboxFX online Help.
Dropouts appear. 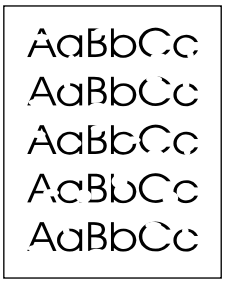	A single sheet of print media might be defective.	Try reprinting the job.
	The moisture content of the paper is uneven or the paper has moist spots on its surface.	Try different paper, such as high-quality paper that is intended for color laser printers.
	The paper lot is flawed. The manufacturing processes can cause some areas to reject toner.	Try different paper, such as high-quality paper that is intended for color laser printers.
Vertical streaks or bands appear on the page. 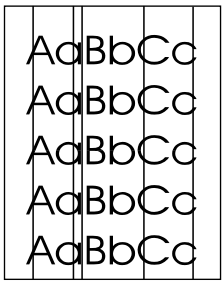	One or more print cartridges might be low or defective. If you are using non-HP print cartridges, no messages appear on the device control panel or in the HP ToolboxFX.	Replace any low print cartridges.
The amount of background toner shading becomes unacceptable. 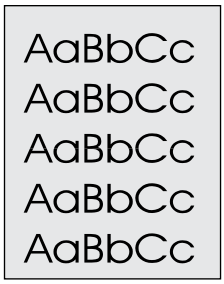	The media might not meet HP specifications.	Use a different paper with a lighter basis weight.
	Very dry (low humidity) conditions can increase the amount of background shading.	Check the device environment.
	One or more print cartridges might be low. If you are using non-HP print cartridges, no messages appear on the device control panel or in the HP ToolboxFX.	Replace any low print cartridges.

Download Service Manual And Resetter Printer at http://printer1.blogspot.com

Table 6-6 General print quality issues (continued)

Problem	Cause	Solution
Toner smears appear on the media. 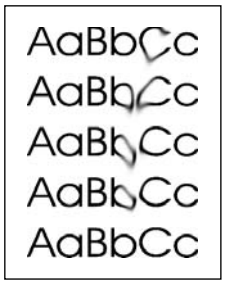	The media might not meet HP specifications.	Use media that meets HP specifications.
	If toner smears appear on the leading edge of the paper, the media guides are dirty, or debris has accumulated in the print path.	Clean the media guides and the paper path.
The toner smears easily when touched. 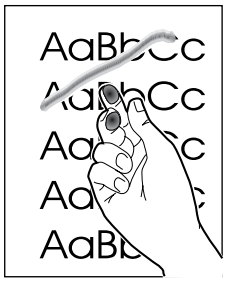	The device is not set to print on the type of media on which you want to print.	In the printer driver, select the **Paper** tab and set **Type is** to match the type of media on which you are printing. Print speed might be slower if you are using heavy paper.
	The media might not meet HP specifications.	Use media that meets HP specifications.
	The paper path might need cleaning.	Clean the device.
Marks repeatedly appear at even intervals on the printed side of the page. 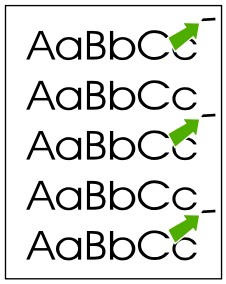	The device is not set to print on the type of media on which you want to print.	In the printer driver, select the **Paper** tab and set **Type is** to match the type of paper on which you are printing. Print speed might be slower if you are using heavy paper. For more information, see Repetitive-image-defect ruler on page 174.
	Internal parts might have toner on them.	The problem typically corrects itself after a few more pages.
	The paper path might need cleaning.	Clean the device.
	The fuser might be damaged or dirty.	Clean using instructions in HP ToolboxFX.
	A print cartridge may have a problem.	To determine which cartridge has a problem, print the PQ diagnostics page from HP ToolboxFX.

Download Service Manual And Resetter Printer at http://printer1.blogspot.com

Table 6-6 General print quality issues (continued)

Problem	Cause	Solution
Marks repeatedly appear at even intervals on the unprinted side of the page. 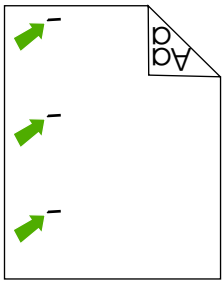	Internal parts might have toner on them.	The problem typically corrects itself after a few more pages.
	The paper path might need cleaning.	Clean the device.
	The fuser might be damaged or dirty.	Clean using instructions in HP ToolboxFX. For more information, see Repetitive-image-defect ruler on page 174.
The printed page contains misformed characters. 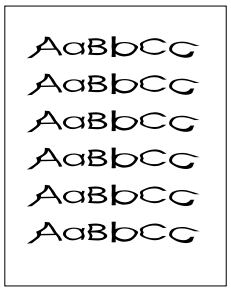	The media might not meet HP specifications.	Use a different paper, such as high-quality paper that is intended for color laser printers.
	If characters are incorrectly formed so that they produce a wavy effect, the laser scanner might need service.	Verify that the problem also occurs on the Configuration page.
The printed page is curled or wavy. 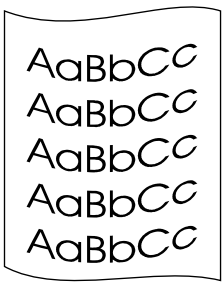	The device is not set to print on the type of media on which you want to print.	In the printer driver, select the **Paper** tab and set **Type is** to match the type of paper on which you are printing. Print speed might be slower if you are using heavy paper.
	The media might not meet HP specifications.	Use a different paper, such as high-quality paper that is intended for color laser printers.
	Both high temperature and humidity can cause paper curl.	Check the device environment.
Text or graphics are skewed on the printed page. 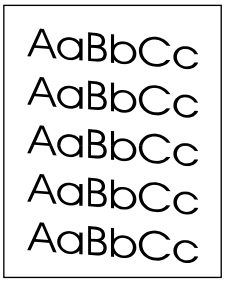	The media might be loaded incorrectly.	Make sure that the paper or other print media is loaded correctly and that the media guides are not too tight or too loose against the stack.
	The media might not meet HP specifications.	Use a different paper, such as high-quality paper that is intended for color laser printers.

Download Service Manual And Resetter Printer at http://printer1.blogspot.com

Table 6-6 General print quality issues (continued)

Problem	Cause	Solution
The printed page contains wrinkles or creases. 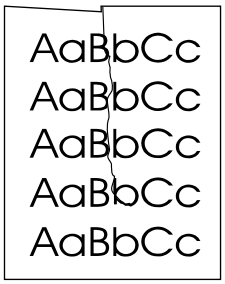	The media might be loaded incorrectly.	Verify that the media is loaded correctly and that the media guides are not too tight or too loose against the stack. Turn over the stack of paper in the input tray, or try rotating the paper 180° in the input tray.
	The media might not meet HP specifications.	Use a different paper, such as high-quality paper that is intended for color laser printers.
Toner appears around the printed characters. 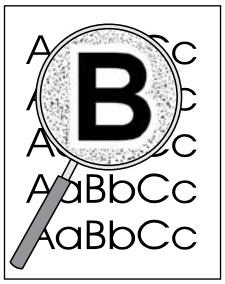	The media might be loaded incorrectly.	Turn over the stack of paper in the tray.
	If large amounts of toner have scattered around the characters, the paper might have high resistivity.	Use a different paper, such as high-quality paper that is intended for color laser printers.
An image that appears at the top of the page (in solid black) repeats farther down the page (in a gray field). 	Software settings might affect image printing.	In your software program, change the tone (darkness) of the field in which the repeated image appears. In your software program, rotate the whole page 180° to print the lighter image first.
	The order of images printed might affect printing.	Change the order in which the images are printed. For example, have the lighter image at the top of the page, and the darker image farther down the page.
	A power surge might have affected the device.	If the defect occurs later in a print job, turn the device off for 10 minutes, and then turn on the device to restart the print job.

Solving issues with color documents

This section describes issues that can occur when you print in color.

Download Service Manual And Resetter Printer at http://printer1.blogspot.com

Table 6-7 Color document issues

Problem	Cause	Solution
Only black is printing when the document should be printing in color. 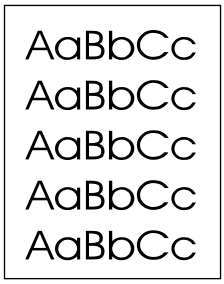	Color mode is not selected in your program or printer driver.	Select color mode instead of grayscale mode.
	The correct printer driver might not be selected in the program.	Select the correct printer driver.
	The device might not be correctly configured.	Print a Configuration page.
One or more colors are not printing, or are inaccurate. 	Sealing tape might be on the print cartridges.	Verify that the sealing tape has been completely removed from the print cartridges.
	The media might not meet HP specifications.	Use a different paper, such as high-quality paper that is intended for color laser printers.
	The device might be operating in excessively humid conditions.	Verify that the device environment is within humidity specifications.
	One or more print cartridges might be low. If you are using non-HP print cartridges, no messages appear on the device control panel or in the HP ToolboxFX.	Replace any low print cartridges.
	The control panel is set for override.	Replace low or empty print cartridges.
A color is printing inconsistently after you load a new print cartridge. 	Another print cartridge might be low. If you are using a non-HP print cartridge, it might be low or empty but you will receive no indication.	Remove the print cartridge for the color that is printing inconsistently and reinstall it.
	The control panel is set for override.	Replace low or empty print cartridges.

Download Service Manual And Resetter Printer at http://printer1.blogspot.com

Table 6-7 Color document issues (continued)

Problem	Cause	Solution
The colors on the printed page do not match the colors as they appear on the screen. 	The colors on your computer monitor might differ from the device output.	Select **Screen Match** in the **Color** tab of the printer driver.
	If extremely light colors or extremely dark colors on screen are not printing, your software program might interpret extremely light colors as white or extremely dark colors as black.	If possible, avoid using extremely light or extremely dark colors.
	The media might not meet HP specifications.	Use a different paper, such as high-quality paper that is intended for color laser printers.
The finish on the printed color page is inconsistent. 	The media might be too rough.	Use a smooth paper or print media, such as a high-quality paper that is made for color laser printers. Generally, smoother media produces better results.

Paper handling issues

The following sections contains information about paper-handling issues.

Wrong size/type media

Use the following procedure to troubleshoot and resolve wrong size or type media problems.

1. Make sure that the software program is selecting the correct media size or type.
2. Make sure that the printer driver for the software program is correctly installed, configured, and capable of requesting the desired media size and type.
3. Make sure that the paper guides are touching the edges of the stack of media.
4. If the size of media requested is not loaded in the tray selected, the printer draws media from the next default tray that contains the correct size. Load the correct media in the tray and make sure that the tray is adjusted correctly. Load the tray with enough media to complete the print job. (See the *HP Color LaserJet 2605, 2605dn, 2605dtn User Guide* for information about configuring the input trays.)

Download Service Manual And Resetter Printer at http://printer1.blogspot.com

Cannot select a tray or feature to use

When you cannot select a tray or feature to use, use the following procedure to troubleshoot and resolve problems.

1. When the size of media requested is not loaded in the tray selected, the printer draws media from the next default tray that contains the correct size. Load the correct media in the tray and make sure that the tray is adjusted correctly. Load the tray with enough media to complete the print job. (See the *HP Color LaserJet 2605, 2605dn, 2605dtn User Guide* for information about configuring the input trays.)
2. Make sure that the driver for the software program is correctly installed, configured, and capable of requesting the desired media size and type, or feature.

Performance problems

Try the tips in this section if pages exit the device but have nothing printed on them, or when the device does not print any pages.

Download Service Manual And Resetter Printer at http://printer1.blogspot.com

Table 6-8 Performance issues

Problem	Cause	Solution
Pages print but are totally blank.	The sealing tape might still be in the print cartridges.	Verify that the sealing tape has been completely removed from the print cartridges.
	The document might contain blank pages.	Check the document that you are printing to see if content appears on all of the pages.
	The device might be malfunctioning.	To check the device, print a Configuration page.
Pages print very slowly.	Heavier media types can slow the print job.	Print on a different type of media.
	Complex pages will print slower.	Proper fusing may require a slower print speed to ensure the best print quality.
Pages did not print.	The device might not be pulling media correctly.	See Paper handling issues on page 160.
	The media is jamming in the device.	Clear the jam.
	The USB cable might be defective or incorrectly connected.	• Disconnect the USB cable at both ends and reconnect it. • Try printing a job that has printed in the past. • Try using a different USB cable.
	Other devices are running on your computer.	The device might not share a USB port. If you have an external hard drive or network switchbox that is connected to the same port as the device, the other device might be interfering. To connect and use the device, you must disconnect the other device or you must use two USB ports on the computer.

Download Service Manual And Resetter Printer at http://printer1.blogspot.com

Functional tests (SERVICE ONLY)

Engine-test print

The engine-test print is used to confirm whether the printer operates correctly or not. It is performed by the engine controller.

If a malfunction occurs in the printer, perform an engine-test print while the printer is in STBY mode and then press the test-print switch (on the rear side of the printer) once. A one-page test pattern of horizontal lines will print as shown below.

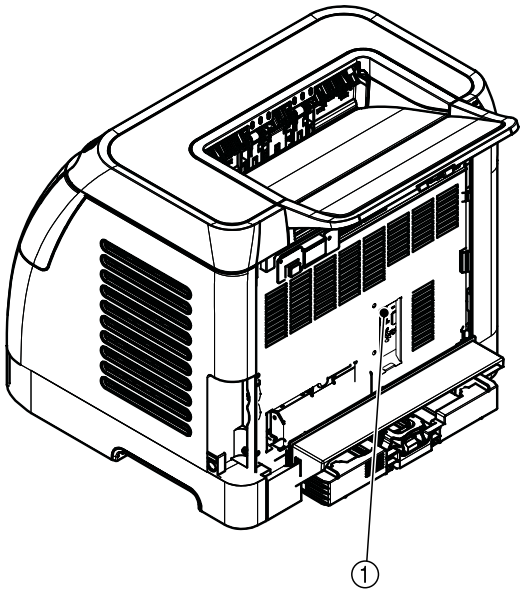

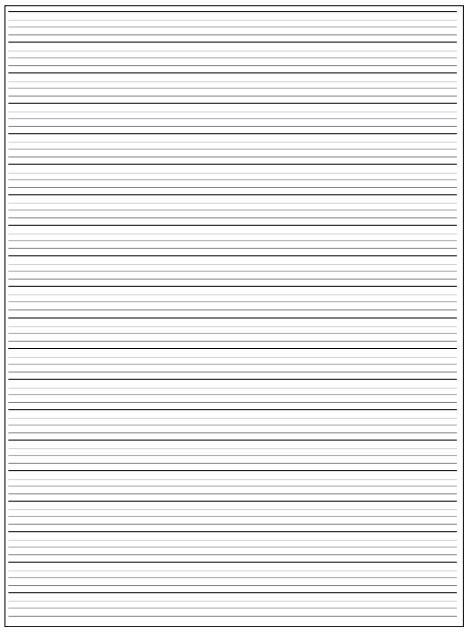

Figure 6-2 Engine-test print switch

1	Engine test print switch

Download Service Manual And Resetter Printer at http://printer1.blogspot.com

Service mode functions (SERVICE ONLY)

Cold reset

Cold reset, which power-cycles the engine with a special button press, is not supported for this printer. Instead, use the feature “Restore defaults” located in the Service menu to reset default settings. For more information, see Service menu on page 169.

NVRAM initializer

CAUTION NVRAM initialization will erase all network settings. Before performing NVRAM initialization, print a Configuration page, which contains network-setting information.

NVRAM init will perform the following functions:

- Resets all customer-accessible menu settings via control panel and software back to the factory default settings
- Resets the language to the value set at the factory
- Resets the default media size to cold reset media size
- Resets the symbol set to PC-8

Use the following procedure to execute an NVRAM-init.

1. Turn off the printer.
2. Press and hold the (Select) and (Cancel Job) buttons simultaneously.
3. Turn on the printer.
4. When you see the message **Permanent storage init** displays, release the (Select) and (Cancel Job) buttons.

When the NVRAM init is complete, the printer will return to the Ready state.

Super NVRAM initializer

CAUTION Super NVRAM initialization will erase all network settings. Before performing Super NVRAM initialization, print a Configuration page, which contains network setting information.

When a super NVRAM init is performed, the printer enters the Generic Product Mode, which changes the language and country/region settings to “undefined.”

NOTE Super NVRAM init will erase all data stored in the protected NVRAM settings.

Use the following procedure to execute a super NVRAM init.

1. Turn off the printer.
2. Press and hold the (Left arrow) and (Right arrow) buttons simultaneously.

Download Service Manual And Resetter Printer at http://printer1.blogspot.com

3. Turn on the printer.

4. When you see the message **Permanent storage init** displays, release the (Left arrow) and (Right arrow) buttons.

When the super NVRAM init is complete, the printer will return to the Ready state.

Restoring page counts and serial number

A software utility is available on the Service and Support CD-ROM to restore page counts and serial numbers when the formatter is replaced or when any of the following settings are lost:

- Color page count
- Total page count
- Formatter number
- Service ID
- USB serial number

To access the utility on the Service and Support CD-ROM, in the **Library** folder, double-click the **2600config.exe** program. You can run the utility from the CD-ROM or copy it to your computer.

NOTE To use this program, the printer must be directly connected to your computer with a USB cable.

Cleaning the ETB

To clean the ETB, use the following procedure:

1. Enter the Secondary service menu. For more information, see Secondary service menu on page 169.

2. Scroll through the menu and select Clean ETB.

3. Press the (Select) button to start the cleaning mode.

Download Service Manual And Resetter Printer at http://printer1.blogspot.com

Troubleshooting tools

The section describes the tools that can help you solve problems with your device.

Printer pages and reports

This section describes the pages and reports that help you diagnose and solve problems with the device.

Demo page

To verify that your printer is functioning properly, print a Demo page. For more information about the Demo page, see Demo page on page 40.

Download Service Manual And Resetter Printer at http://printer1.blogspot.com

Configuration page

The Configuration page lists the current settings and properties of the printer. You can use this page to check for color plane registration and cartridge half tones. You can print a Configuration page from the printer or HP ToolboxFX.

For more information about the Configuration page, see Configuration page on page 40.

Supplies Status page

The Supplies Status page lists the remaining life of the HP print cartridges. It also lists the estimated pages remaining, number of pages printed, and other supplies information. You can print a Supplies Status page from the printer or HP ToolboxFX.

For more information about the Supplies Status page, see Supplies Status page on page 41.

Fuser cleaning page

For information about fuser cleaning pages, see Cleaning page on page 172.

Print quality troubleshooting pages

For more information about print quality troubleshooting pages, see HP ToolboxFX on page 171.

Status log

The status log for this printer is located on the Configuration page and lists the last five events. For more information, see Configuration page on page 167.

Table 6-9 Status-log messages

Error log code	Description
10.0000	Black e-label error
10.0001	Cyan e-label error
10.0002	Magenta e-label error
10.0003	Yellow e-label error
10.1000	Black e-label missing
10.1001	Cyan e-label missing
10.1002	Magenta e-label missing
10.1003	Yellow e-label missing
10.3000	Non-HP black
10.3001	Non-HP cyan
10.3002	Non-HP magenta
10.3003	Non-HP yellow
13.0000	Paper jam, Tray 1 area
13.0001	Paper jam, Tray 2 area
13.0002	Paper jam, Tray 3 area

Download Service Manual And Resetter Printer at http://printer1.blogspot.com

Table 6-9 Status-log messages (continued)

Error log code	Description
13.0003	Paper jam, registration drum area
13.0004	Paper jam, drum fuser area
13.0005	Paper jam, fuser output area
20.0000	Memory out
21.0000	Video under run
50.1000	Low temperature fuser error
50.2000	Slow fuser error
50.3000	High temperature fuser error
50.4000	Fuser heater wire failure
50.5000	Fuser low temperature subtherm failure
50.6000	Fuser high temperature subtherm failure
52.0000	Scanner error, black laser failure
52.0100	Scanner error, cyan laser failure
52.0200	Scanner error, magenta laser failure
52.0300	Scanner error, yellow laser failure
54.0600	Density sensor error
54.1000	Color plane registration sensor error
54.2800	Sensor density contaminated
54.2801	Sensor color plane registration contaminated
55.0000	Engine comm fatal error
55.0001	Engine comm critical error
55.1000	DC controller memory error
57.0000	Fan motor error
57.0001	Fan cartridge failure
59.0000	Paper path/ETB rotation failure
59.0001	Paper path/ETB ramp up failure
101.0000	Color plane registration error
102.0000	DMAX calibration error
103.0000	DHALF calibration error

Event log

Information for the last five events is available on the Configuration page under the Status log section. For more information, see Configuration page on page 167.

For a list of messages that only appear in the event log, see Status-log messages on page 140.

Download Service Manual And Resetter Printer at http://printer1.blogspot.com

Service menu

Use the control-panel **Service** menu to troubleshoot device problems.

Service menu settings

The service menu is used to calibrate, restore factory default settings, and clean the print paper path.

The following service menu items are available:

- **Restore defaults**—used to reset all customer-accessible menu settings back to the factory default settings (except language) via the control panel or software

  NOTE This service menu item does not reset factory-settable settings, including formatter number, page counts, factory paper settings, language, and so on.

- **PowerSave**—used to configure the amount of idle time before the engine enters sleep mode
- **Cleaning mode**—used to remove dust and toner from the print paper path

Restoring the factory-set defaults

Restoring the factory-set defaults returns all of the settings to the factory defaults.

To restore the factory-set defaults

1. Use the (Left arrow) or the (Right arrow) button to select **Service**, and then press (Select).
2. Use the (Left arrow) or the (Right arrow) button to select **Restore defaults**, and then press (Select).

   The device automatically restarts.

Secondary service menu

The secondary service menu is intended for use by manufacturing engineers, service engineers, developers, and support personnel. This menu provides options to perform various tests and print out special reports.

The following secondary service menu items are available:

- **Service Reports**—used to print out a continuous configuration report, translation report, and error report
- **USB Speed**—enables or disables the ability for the printer to operate in high speed.

  The following **USB Speed** setting options are available:

  - Auto
  - Hi speed
  - Full speed

- **Display test**—verifies that all of the characters on the display function correctly by allowing you to manually scroll through the characters

Download Service Manual And Resetter Printer at http://printer1.blogspot.com

- **Clean ETB**—used to clean the ETB
- **Calibrations**
  - **All Cals**
  - **CPR Cal**
  - **DMAX/DHALF Cal**
  - **DHALF Only Cal**
  - **Test Page**

To enter the secondary service menu, use the following procedure:

1. Confirm that the device is in a **Ready** state.
2. Press the button (Select) to enter the main menu system.
3. Press the button (Left arrow) and the button (Cancel Job) simultaneously.
4. Press the button (Select) to confirm **2ndary Service**.
5. Press the (Left arrow) button and button (Right arrow) to navigate to the secondary service menu.

Download Service Manual And Resetter Printer at http://printer1.blogspot.com

HP ToolboxFX

HP ToolboxFX

HP ToolboxFX is a Web-based application that you can use for troubleshooting tasks.

To view HP ToolboxFX

Open HP ToolboxFX in one of these ways:

- On the Windows desktop, double-click the HP ToolboxFX icon.
- On the Windows **Start** menu, click **Programs** (**All Programs** in Windows XP), click **HP**, click **HP Color LaserJet 2605 Series**, and then click **HP ToolboxFX**.

Troubleshooting tab

HP ToolboxFX includes a **Troubleshooting** tab that contains links to the following main pages:

- **Control Panel Messages**. View descriptions of printer control-panel messages.
- **Clearing Jams**. View information about locating and clearing jams.
- **Print Problems**. View Help topics that can help you solve print problems.
- **Memory Card Problems**. View Help topics that can help you solve memory-card problems.
- **Connectivity Problems**. View Help topics that can help you solve networking problems.
- **Troubleshooting Tools**. Employ such troubleshooting tools as a cleaning page or a color troubleshooting page to maintain the printer.

NOTE Other tabs on HP ToolboxFX might be helpful in troubleshooting printer problems. For information about the other tabs on HP ToolboxFX, see HP ToolboxFX on page 44.

Print quality troubleshooting pages

The following features are available from the HP ToolboxFX.

Printer calibration

Calibrations are performed at regular intervals. For best print quality, a calibration can be performed from the control panel. For information about calibrating the printer at the control panel, see Printer calibration on page 81.

Calibrating the printer using HP ToolboxFX

Use the following steps to calibrate the printer using HP ToolboxFX.

1. Open the HP ToolboxFX.
2. On the **Troubleshooting** tab, click **Calibrate now**.
3. Click the **Troubleshooting** tab and then click **Troubleshooting Tools** (on the left side of the screen).
4. In the Calibration section, click **CALIBRATE NOW**.

Download Service Manual And Resetter Printer at http://printer1.blogspot.com

Cleaning page

The device features a special cleaning mode to clean the paper path.

NOTE Use the following procedure to clean the paper path using the HP ToolboxFX. To clean the engine when the computer is running an operating system that does not support HP ToolboxFX, see the late-breaking Readme on the root of the CD-ROM, or visit http://www.hp.com/support/clj2605.

1. Make sure that the printer is turned on and in the Ready state.
2. Open the HP ToolboxFX.
3. On the **Troubleshooting** tab, click **Maintenance**, click **Cleaning Page**, and then click **Print**. A page with a pattern prints from the printer.
4. At the printer, remove any print media in Tray 2 or optional Tray 3.
5. Remove the page that printed and load it face-down into Tray 2 or optional Tray 3.

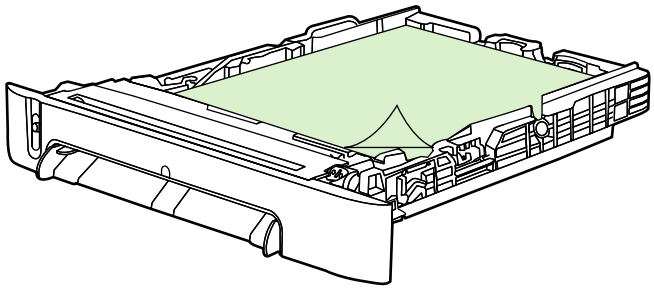

6. At the computer, press **Clean**.

Configuration page

The Configuration page lists the current settings and properties of the printer. You can print a Configuration page from the printer or HP ToolboxFX. To print the Configuration page from the printer, see Configuration page on page 167.

Download Service Manual And Resetter Printer at http://printer1.blogspot.com

Diagnostic resources

Reports menu

The Reports menu contains the following diagnostic tools:

- Demo page
- Menu structure report
- Configuration report
- Color supplies status

For a more detailed description about the diagnostic tools available from the Reports menu, see Printer pages and reports on page 166.

Network/Web diagnostics tools

For information on available network and Web diagnostic tools, go to http://www.hp.com/support/clj2605.

Download Service Manual And Resetter Printer at http://printer1.blogspot.com

Repetitive-image-defect ruler

Use a repetitive-image-defect ruler to measure occurrences of repetitive image defects. Place the ruler next to the first occurrence of the defect on the page. Find the distance between identical defects and see the Table 6-10 Repetitive image defects on page 174 table to identify the component that is causing the defect.

Table 6-10 Repetitive image defects

Measurement	Component
24.7 mm (0.97 inch)	Developer sleeve
26.7 mm (1.05 inches)	Charge roller
32.9 mm (1.3 inches)	RS roller
37.7 mm (1.48 inches)	Transfer roller
54.5 mm (2.15 inches)	ETB rollers
56.6 mm (2.22 inches)	Fuser sleeve
62.8 mm (2.47 inches)	Pressure roller
75.4 mm (2.97 inches)	OPC

Download Service Manual And Resetter Printer at http://printer1.blogspot.com

Firmware and software updates

Use the following procedure to periodically check for firmware and software updates.

1. Go to http://www.hp.com/support/clj2605.
2. Select **Download drivers and software** and then select the appropriate operating system for your computer.
3. Follow the instructions provided on the download pages.

Download Service Manual And Resetter Printer at http://printer1.blogspot.com

Download Service Manual And Resetter Printer at http://printer1.blogspot.com

7 Parts and diagrams

NOTE In this chapter, part numbers are only listed for available replaceable parts.

This section contains the following information.

- Overview
- Assembly locations
- Covers
- Internal assemblies
- Input devices
- Diagrams
- Alphabetical parts list
- Numerical parts list

Download Service Manual And Resetter Printer at http://printer1.blogspot.com

Overview

Replaceable parts

The following table lists the replaceable parts available for this printer.

Table 7-1 Replaceable parts

Description	Part number	Diagram
FORMATTER PCB-base	Q7803–60002	
FORMATTER PCB-network	Q5966–60001	
FLAT FLEX CABLE DCC-FORMATTER	Q6456-60101	
FLAT FLEX CABLE-MEMORY CARD ASSEMBLY	Q6456–60102	
ARM, PAPER RETAINER, LEFT	RC2-0253-000CN (simplex)	See Figure 7-11 Fuser assembly (simplex) on page 200.
ARM, PAPER RETAINER, LEFT	RC2-0215-000CN (duplex)	See Figure 7-12 Fuser assembly (duplex) on page 202.
ARM, PAPER RETAINER, RIGHT	RC2-0254-000CN (simplex)	See Figure 7-11 Fuser assembly (simplex) on page 200.
ARM, PAPER RETAINER, RIGHT	RC2-0216-000CN (duplex)	See Figure 7-12 Fuser assembly (duplex) on page 202.
RETAINER, PAPER	RC1-5062-000CN	See Figure 7-11 Fuser assembly (simplex) on page 200.
CABLE COVER UNIT	RC1-5147-000CN	See Figure 7-7 Internal components (2 of 3) on page 194.
COVER, LEFT	RC1-5183-000CN	See Figure 7-3 External panels and covers on page 186.
COVER, CASSETTE, LEFT	RC1-5184-000CN	See Figure 7-3 External panels and covers on page 186.
COVER, CASSETTE, RIGHT	RC1-5188-030CN	See Figure 7-3 External panels and covers on page 186.
COVER, CASSETTE, DUST	RC1-5200-000CN	See Figure 7-3 External panels and covers on page 186. and Figure 7-18 250-sheet input tray internal components on page 214.
PLATE, REAR	RC1-5227-020CN	See Figure 7-3 External panels and covers on page 186.
ROLLER, PICK UP	RC1-5440-000CN	See Figure 7-19 Paper pick-up feeder assembly (Tray 2) on page 216 and Figure 7-21 Paper pickup feeder assembly (Tray 3) on page 220.
COVER, FACE DOWN	RC1-5173-000CN	See Figure 7-3 External panels and covers on page 186.
FUSER ASSEMBLY - SIMPLEX	RM1-1828-000CN 110-127V	See Figure 7-11 Fuser assembly (simplex) on page 200.

Download Service Manual And Resetter Printer at http://printer1.blogspot.com

Table 7-1 Replaceable parts (continued)

Description	Part number	Diagram
FUSER ASSEMBLY - SIMPLEX	RM1-1829-000CN 220-240V	See Figure 7-11 Fuser assembly (simplex) on page 200.
FUSER ASSEMBLY - DUPLEX	RM1-1824-000CN 110-127V	See Figure 7-12 Fuser assembly (duplex) on page 202.
FUSER ASSEMBLY - DUPLEX	RM1-1825-000CN 220-240V	See Figure 7-12 Fuser assembly (duplex) on page 202.
DUPLEXING DRIVE ASSEMBLY	RM1-1832-000CN	See Figure 7-6 Internal components (1 of 3) on page 192.
MEMORY-CARD READER ASSEMBLY	Q7821–67901 (DTN)	See Figure 7-14 Memory-card reader assembly on page 206.
FRONT DOOR ASSEMBLY	RM1-1856-000CN (simplex)	See Figure 7-3 External panels and covers on page 186.
FRONT DOOR ASSEMBLY	RM1-1857-000CN (duplex)	See Figure 7-3 External panels and covers on page 186.
RIGHT COVER ASSEMBLY	RM1-1860-000CN	See Figure 7-3 External panels and covers on page 186.
PAPER DELIVERY TRAY ASSEMBLY	RM1-1859-020CN	See Figure 7-3 External panels and covers on page 186.
UPPER COVER ASSEMBLY	RM1–1862–000CN (simplex)	See Figure 7-4 Upper cover assembly - simplex model on page 188.
UPPER COVER ASSEMBLY	RM1–1855–000CN (duplex)	SeeFigure 7-5 Upper cover assembly - duplex models on page 190.
COVER, INSIDE, UPPER	RC1-5178-040CN	See Figure 7-4 Upper cover assembly - simplex model on page 188.
COVER, INSIDE, UPPER	RC1-5179-000CN	SeeFigure 7-5 Upper cover assembly - duplex models on page 190.
ETB UNIT - SIMPLEX	RM1-1891-000CN	See Figure 7-7 Internal components (2 of 3) on page 194.
ETB UNIT - DUPLEX	RM1-1892-000CN	See Figure 7-7 Internal components (2 of 3) on page 194.
TRAY 1 & 2 CASSETTE (tray only)	RM1-1916-050CN	See Figure 7-16 Tray 2 input tray (cassette) on page 210.
SEPARATION ASSEMBLY	RM1-1922-000CN	See Figure 7-16 Tray 2 input tray (cassette) on page 210 and Figure 7-20 Tray 3 input tray (cassette) on page 218.
FEED ASSEMBLY	RM1-1923-000CN	See Figure 7-16 Tray 2 input tray (cassette) on page 210.
TRAY 3 CASSETTE (tray only)	RM1-1945-000CN	See Figure 7-20 Tray 3 input tray (cassette) on page 218.
DC CONTROLLER PCA ASSEMBLY	RM1-3423-000CN	See Figure 7-8 Internal components (3 of 3) on page 196 and Figure 7-15 PCA assembly location on page 208.

Download Service Manual And Resetter Printer at http://printer1.blogspot.com

Table 7-1 Replaceable parts (continued)

Description	Part number	Diagram
CONTROL PANEL ASSEMBLY	RM1-1861-000CN	See Figure 7-9 Control panel assembly on page 198.
Black Toner Cartridge	Q6000A	
Cyan Toner Cartridge	Q6001A	
Yellow Toner Cartridge	Q6002A	
Magenta Toner Cartridge	Q6003A	
Replacement-Toner-Black	Q6000–67902	
Replacement-Toner-Cyan	Q6001–67902	
Replacement-Toner-Yellow	Q6002–67902	
Replacement-Toner-Magenta	Q6003–67902	
Tray 3 paper feeder	Q6459–69001	
Replacement Whole Printer Units (Base)	Q7821-67056 110v Simplex	
Replacement Whole Printer Units (Base)	Q7821-67055 220v Simplex	
Replacement Whole Printer Units (DN)	Q7822-67056 110v DN	
Replacement Whole Printer Units (DN)	Q7822-67055 220v DN	
Replacement Whole Printer Units (DTN)	Q7823-67056 110v DTN	
Replacement Whole Printer Units (DTN)	Q7823-67055 220v DTN	
Refurbished Whole Printer Units (Base)	Q7821-69056 110v Simplex	
Refurbished Whole Printer Units (Base)	Q7821-69055 220v Simplex	
Refurbished Whole Printer Units (DN)	Q7822-69056 110v DN	
Refurbished Whole Printer Units (DN)	Q7822-69055 220v DN	
Refurbished Whole Printer Units (DTN)	Q7823-69056 110v DTN	
Refurbished Whole Printer Units (DTN)	Q7823-69055	

Download Service Manual And Resetter Printer at http://printer1.blogspot.com

Table 7-1 Replaceable parts (continued)

Description	Part number	Diagram
	220v DTN	
Optional Tray 3	Q6459A	
Replacement Tray 3 (tray and assembly)	Q6459-69002	

Order replacement parts from the following Web site:

http://www.partsdirect.hp.com

Related documentation and software

Documentation and software are available at the following Web sites.

Table 7-2 Technical support Web sites

HP Customer Care Online Software drivers, support documentation, and answers to frequently asked questions	http://www.hp.com/support
HP Technical Training	http://www.hp.com/education

Supplies

Printer supplies are listed in Supplies life on page 32. Consumables are available directly from HP at the following numbers.

- US: 1-800-538-8787
- Canada: 1-800-387-3154

Contact your local HP Parts Coordinator for other local phone numbers.

Accessories

Table 7-3 Accessories

Product name	Description	Product number	Part number	Exchange number (replacement number)
Optional 250-sheet tray	Optional Tray 3	Q6459A	Q6459–69002	RM1–1945–000CN

Download Service Manual And Resetter Printer at http://printer1.blogspot.com

Assembly locations

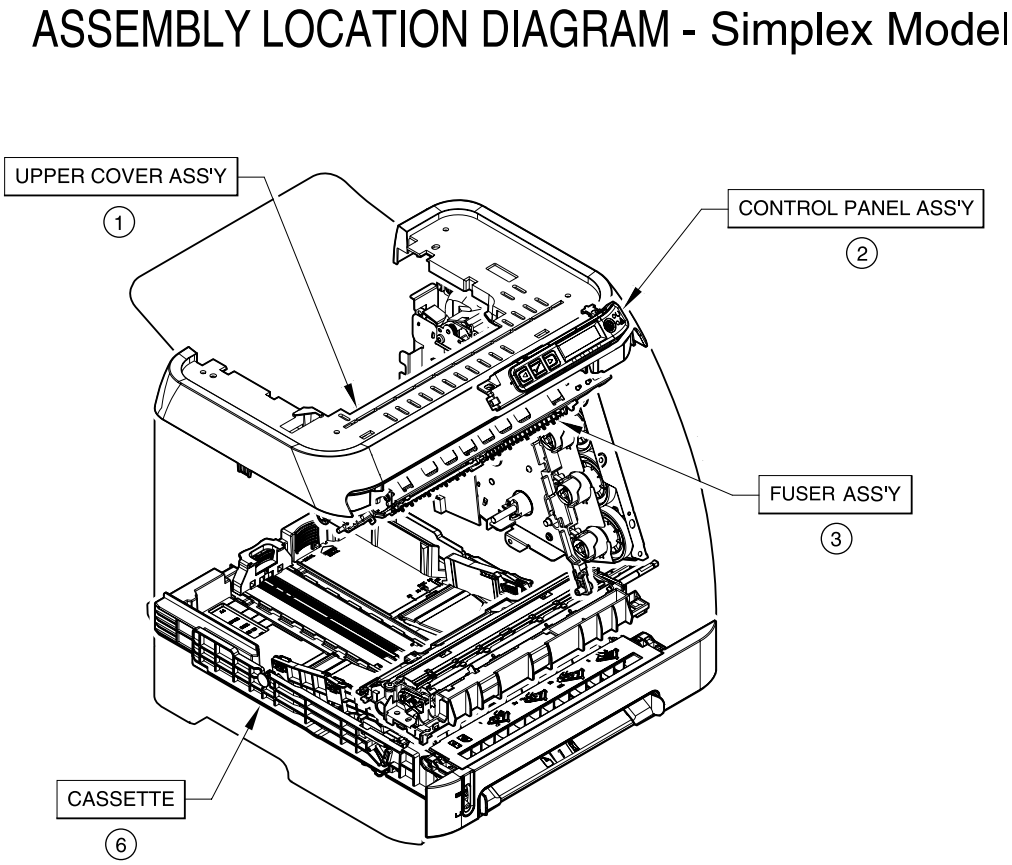

Figure 7-1 Assembly location diagram - simplex model

Download Service Manual And Resetter Printer at http://printer1.blogspot.com

Table 7-4 Assembly locations - simplex model

Ref	Description	Part number	Qty
1	UPPER COVER ASSEMBLY	RM1-1862-000CN (simplex)	
2	CONTROL PANEL ASSEMBLY	RM1-1861-000CN	
3	FUSER ASSEMBLY	RM1-1828-000CN (110v) or RM1-1829-000CN (220v)	
6	CASSETTE	RM1-1916-050CN	

Download Service Manual And Resetter Printer at http://printer1.blogspot.com

ASSEMBLY LOCATION DIAGRAM - DUPLEX MODELS

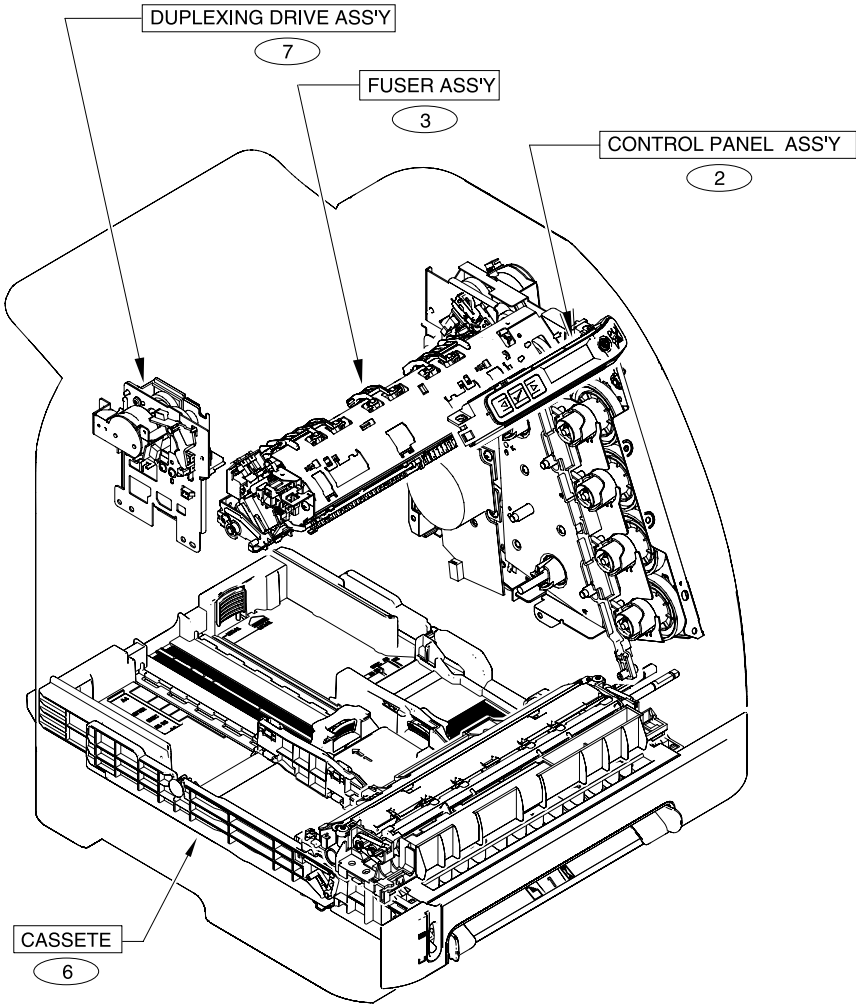

UPPER COVER ASS'Y - See figure 7-5
MEMORY CARD READER ASS'Y - See figure 7-14

Figure 7-2 Assembly location diagram - duplex models

Download Service Manual And Resetter Printer at http://printer1.blogspot.com

Table 7-5 Assembly locations - duplex models

Ref	Description	Part number	Qty
	UPPER COVER ASSEMBLY	RM1-1855-000CN (duplex)	
	MEMORY-CARD READER ASSEMBLY	Q7821-67901 (DTN model only)	
2	CONTROL PANEL ASSEMBLY	RM1-1861-000CN	
3	FUSER ASSEMBLY	RM1-1824-000CN (110v) or RM1-1825-000CN (220v)	
6	CASSETTE	RM1-1916-050CN	
7	DUPLEXING DRIVE ASSEMBLY	RM1-1832-000CN (duplex)	

Download Service Manual And Resetter Printer at http://printer1.blogspot.com

EXTERNAL PANELS AND COVERS

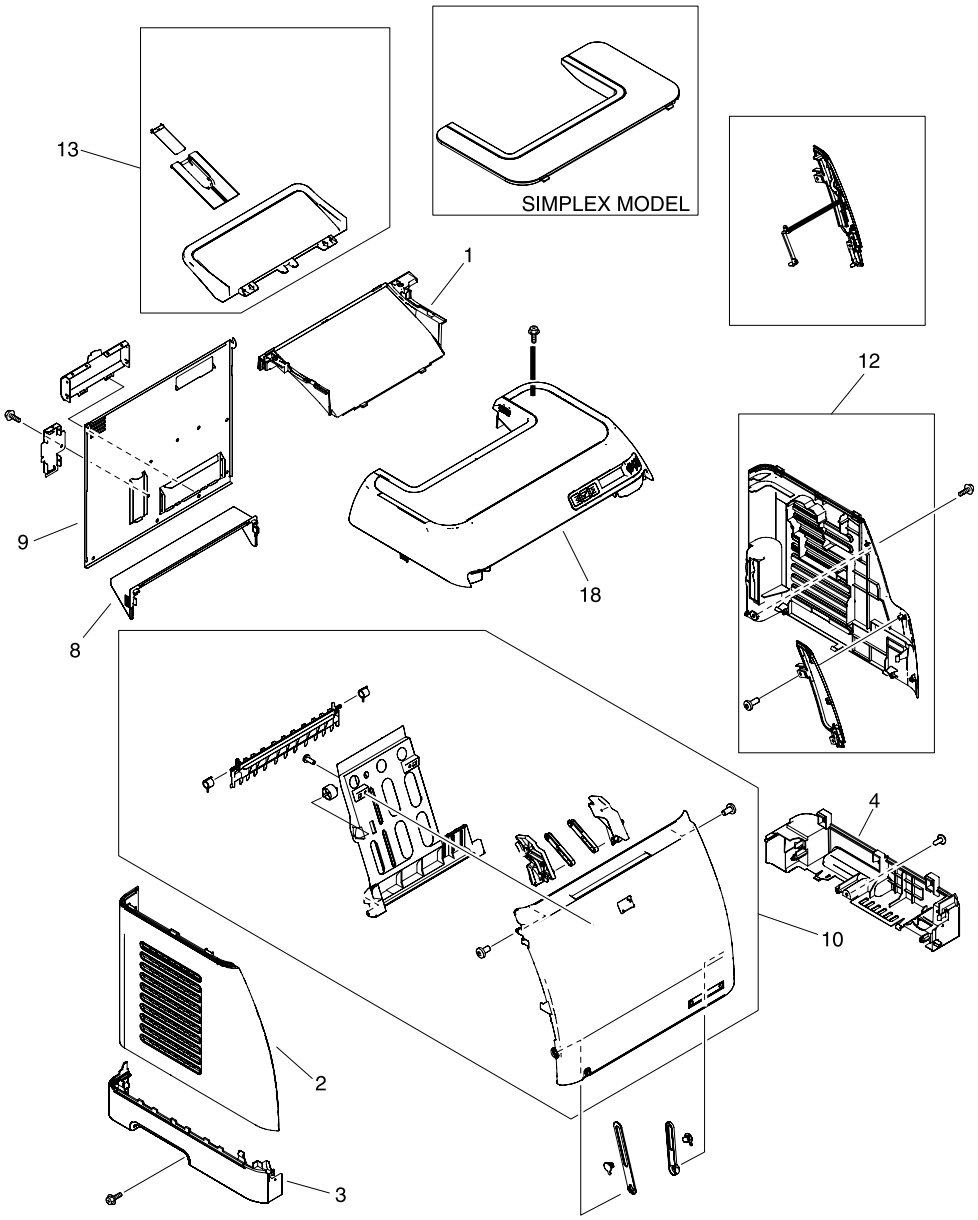

Figure 7-3 External panels and covers

Download Service Manual And Resetter Printer at http://printer1.blogspot.com

Table 7-6 External panels and covers

Ref	Description	Part number	Qty
1	COVER, FACE-DOWN	RC1-5173-000CN	1
2	COVER, LEFT	RC1-5183-000CN	1
3	COVER, CASSETTE, LEFT	RC1-5184-000CN	1
4	COVER, CASSETTE, RIGHT	RC1-5188-030CN	1
8	COVER, CASSETTE DUST	RC1-5200-000CN	1
9	PLATE, REAR	RC1-5227-020CN	1
10	FRONT DOOR ASSEMBLY	RM1-1856-000CN (simplex)	1
10	FRONT DOOR ASSEMBLY	RM1-1857-000CN (duplex)	1
12	RIGHT COVER ASSEMBLY	RM1-1860-000CN	1
13	PAPER DELIVERY TRAY ASSEMBLY	RM1-1859-020CN	1
18	UPPER COVER ASSEMBLY	RM1-1855-000CN (duplex)	1

Download Service Manual And Resetter Printer at http://printer1.blogspot.com

Covers

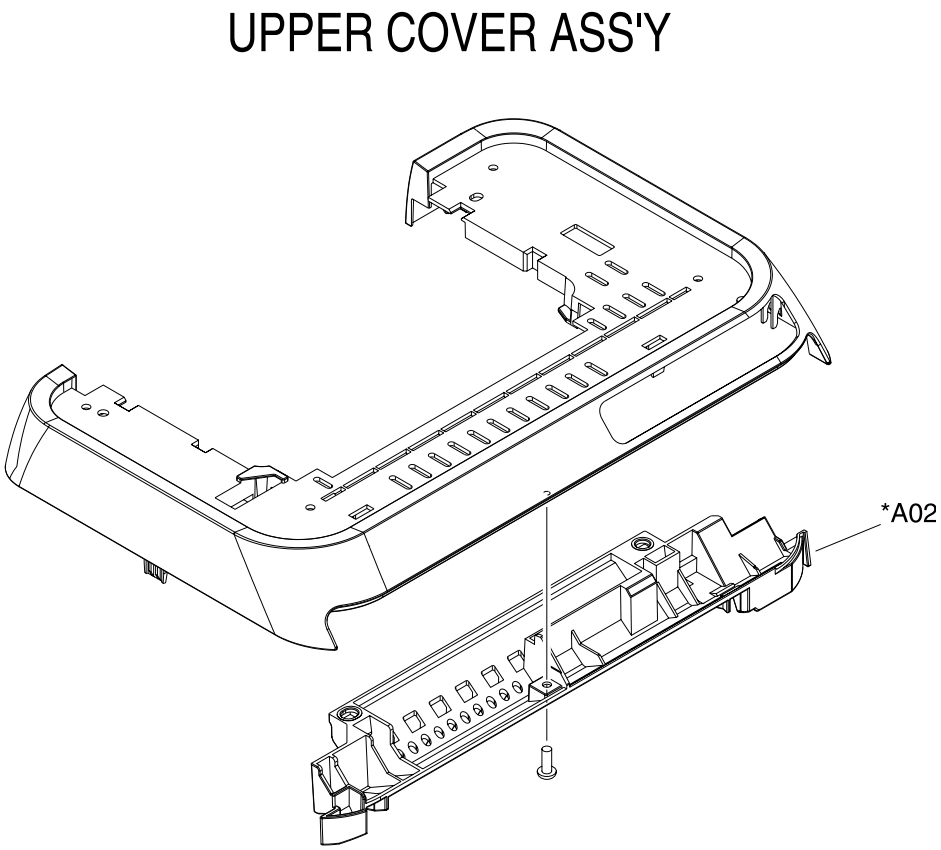

Figure 7-4 Upper cover assembly - simplex model

Download Service Manual And Resetter Printer at http://printer1.blogspot.com

Table 7-7 Upper assembly cover - simplex model

Ref	Description	Part number	Qty
	UPPER COVER ASSEMBLY	RM1-1862-000CN (simplex)	
A02	COVER, INSIDE, UPPER	RC1-5178-040CN	1

Download Service Manual And Resetter Printer at http://printer1.blogspot.com

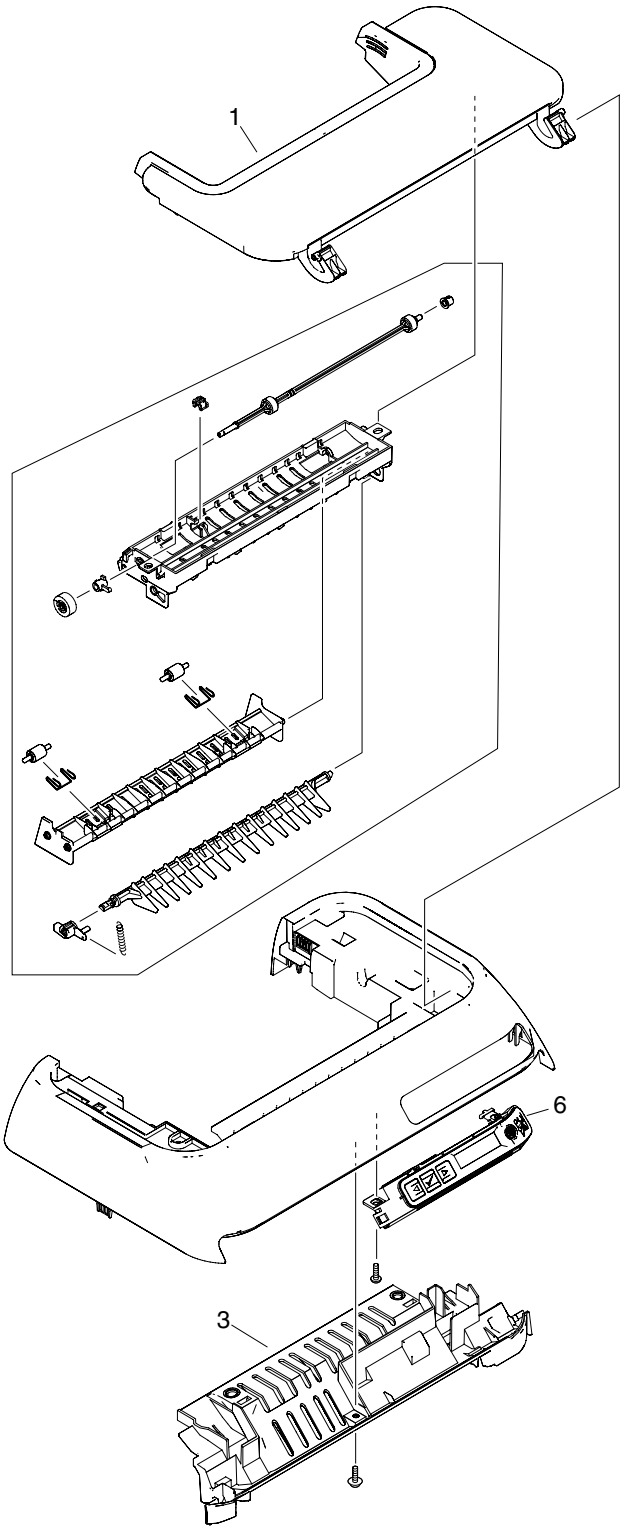

Figure 7-5 Upper cover assembly - duplex models

Download Service Manual And Resetter Printer at http://printer1.blogspot.com

Table 7-8 Upper assembly cover - duplex models

Ref	Description	Part number	Qty
	UPPER COVER ASSEMBLY	RM1-1855-000CN (duplex)	
1	COVER, UPPER FACE	RC1-5175-000CN	1
3	COVER, INSIDE, UPPER	RC1-5179-000CN	1
6	CONTROL PANEL ASSEMBLY	RM1-1861-000CN	1

Download Service Manual And Resetter Printer at http://printer1.blogspot.com

Internal assemblies

INTERNAL COMPONENTS 1

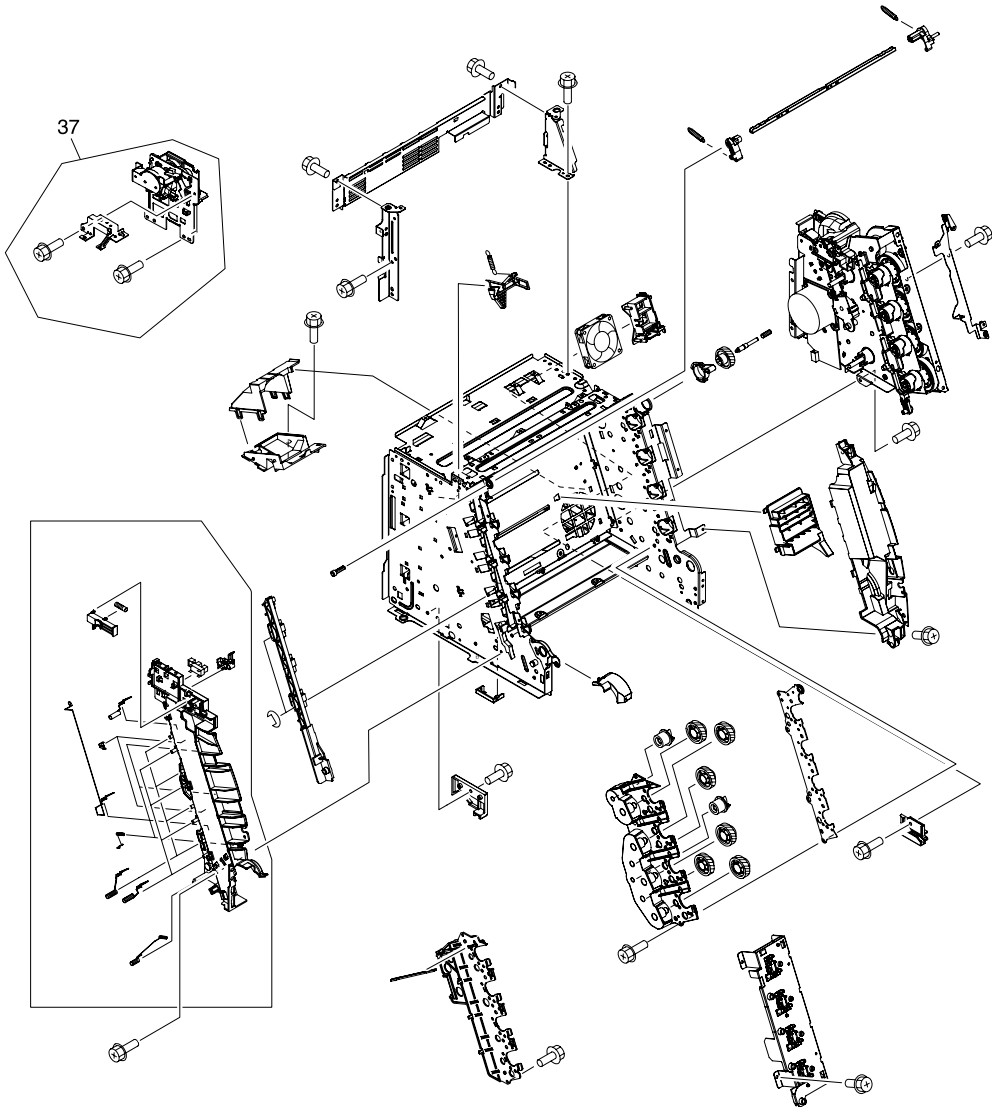

Figure 7-6 Internal components (1 of 3)

Download Service Manual And Resetter Printer at http://printer1.blogspot.com

Table 7-9 Internal components (1 of 3)

Ref	Description	Part number	Qty
37	DUPLEXING DRIVE ASSEMBLY	RM1-1832-000CN	1

Download Service Manual And Resetter Printer at http://printer1.blogspot.com

INTERNAL COMPONENTS 2

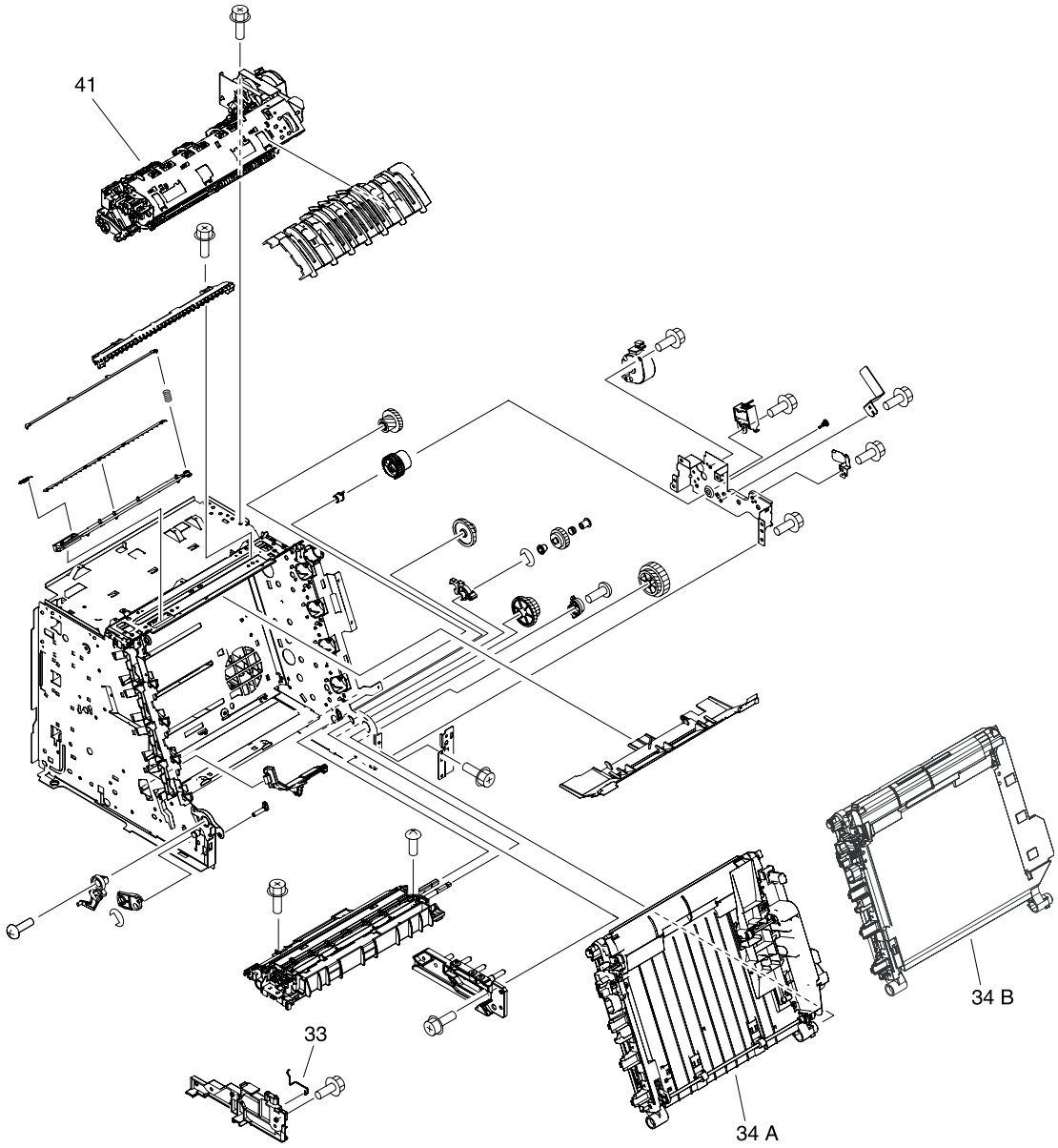

Figure 7-7 Internal components (2 of 3)

Download Service Manual And Resetter Printer at http://printer1.blogspot.com

Table 7-10 Internal components (2 of 3)

Ref	Description	Part number	Qty
33	SPRING, GROUNDING	RC1-5147-000CN	1
34A	ELECT.TRANSPORT BELT (ETB) ASSEMBLY	RM1-1892-000CN (duplex)	1
34B	ELECT.TRANSPORT BELT (ETB) ASSEMBLY	RM1-1891-000CN (simplex)	1
41	FUSER ASSEMBLY	RM1-1828-000CN (110v simplex)	1
41	FUSER ASSEMBLY	RM1-1829-000CN (220v simplex)	1
41	FUSER ASSEMBLY	RM1-1824-000CN (110v duplex)	1
41	FUSER ASSEMBLY	RM1-1825-000CN (220v duplex)	1

Download Service Manual And Resetter Printer at http://printer1.blogspot.com

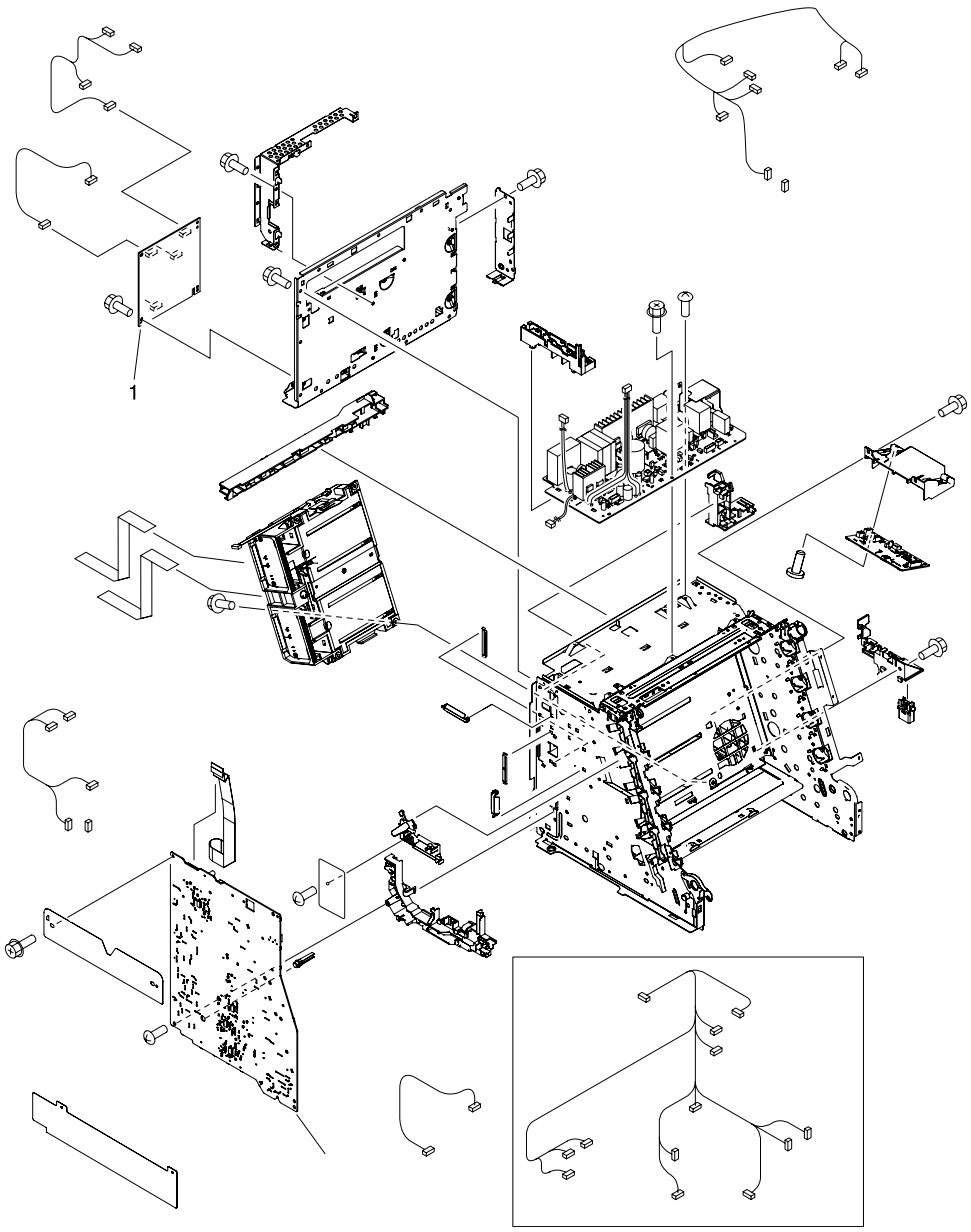

Figure 7-8 Internal components (3 of 3)

Download Service Manual And Resetter Printer at http://printer1.blogspot.com

Table 7-11 Internal components (3 of 3)

Ref	Description	Part number	Qty
1	DC CONTROLLER PCA ASSEMBLY	RM1-3423-000CN	1

Download Service Manual And Resetter Printer at http://printer1.blogspot.com

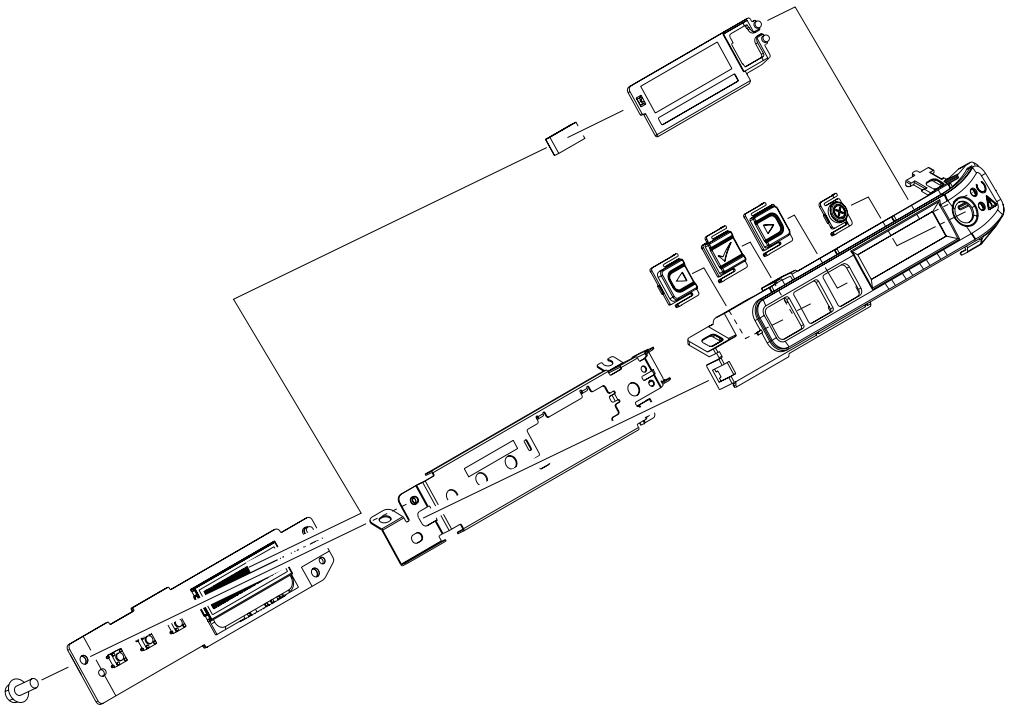

Figure 7-9 Control panel assembly

Download Service Manual And Resetter Printer at http://printer1.blogspot.com

Table 7-12 Control panel assembly

Ref	Description	Part number	Qty
	CONTROL PANEL ASSEMBLY	RM1-1861-000CN	1

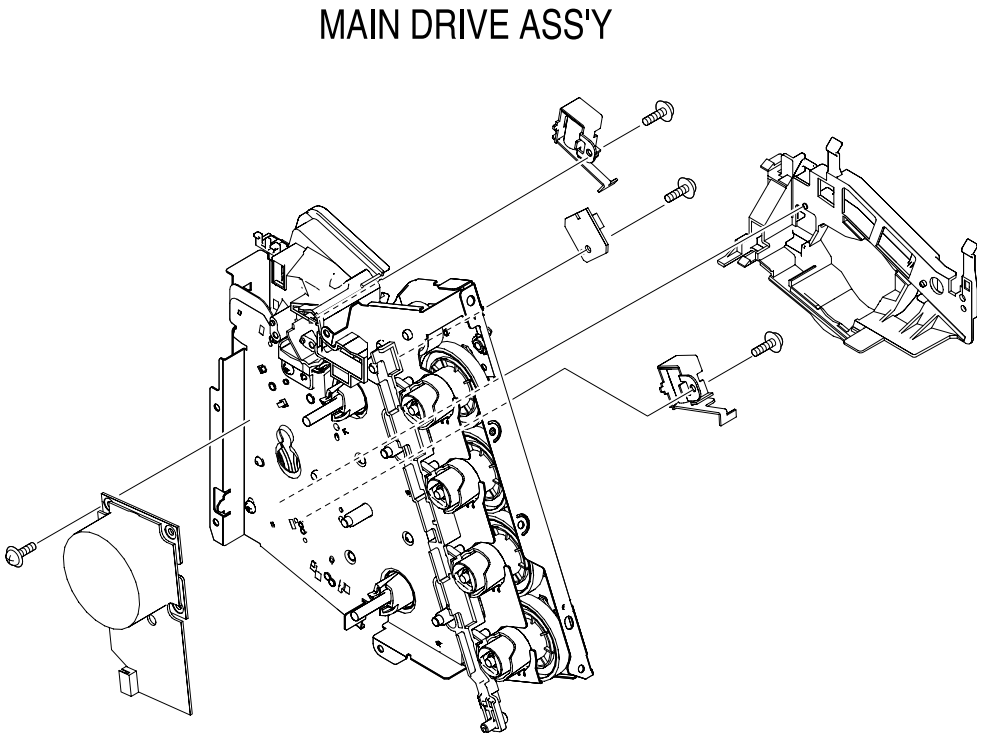

Figure 7-10 Main drive assembly

No parts in this assembly set up for service. Replace the entire printer.

Download Service Manual And Resetter Printer at http://printer1.blogspot.com

FUSER ASS'Y (SIMPLEX)

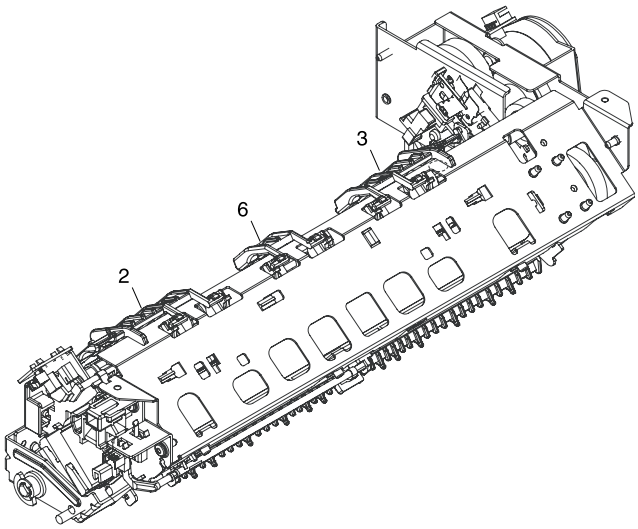

Figure 7-11 Fuser assembly (simplex)

Download Service Manual And Resetter Printer at http://printer1.blogspot.com

Table 7-13 Fuser assembly (simplex)

Ref	Description	Part number	Qty
	FUSER ASSEMBLY	RM1-1828-000CN (110v simplex)	1
	FUSER ASSEMBLY	RM1-1829-000CN (220v simplex)	1
2	ARM, PAPER RETAINER, LEFT	RC2-0253-000CN	1
3	ARM, PAPER RETAINER, RIGHT	RC2-0254-000CN	1
6	RETAINER, PAPER	RC2-0269-000CN	1

Download Service Manual And Resetter Printer at http://printer1.blogspot.com

FUSER ASS'Y (DUPLEX)

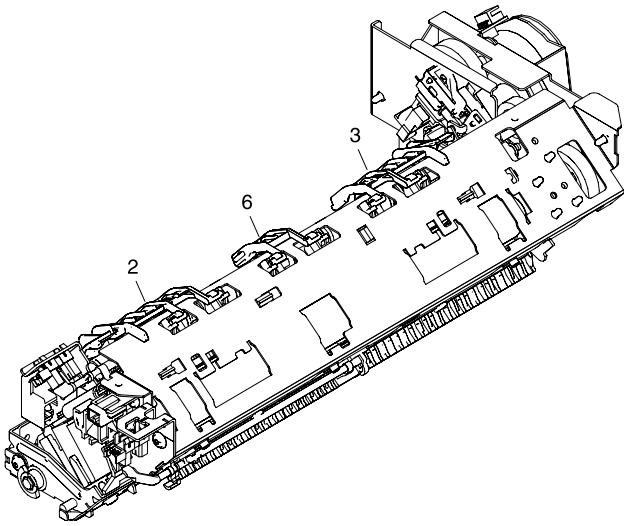

Figure 7-12 Fuser assembly (duplex)

Download Service Manual And Resetter Printer at http://printer1.blogspot.com

Table 7-14 Fuser assembly (duplex)

Ref	Description	Part number	Qty
	FUSER ASSEMBLY	RM1-1824-000CN (110v duplex)	
	FUSER ASSEMBLY	RM1-1825-000CN (220v duplex)	
2	ARM, PAPER RETAINER, LEFT	RC2-0215-000CN	1
3	ARM, PAPER RETAINER, RIGHT	RC2-0216-000CN	1
6	RETAINER, PAPER	RC2-0269-000CN	1

Download Service Manual And Resetter Printer at http://printer1.blogspot.com

DUPLEXING DRIVE ASS'Y

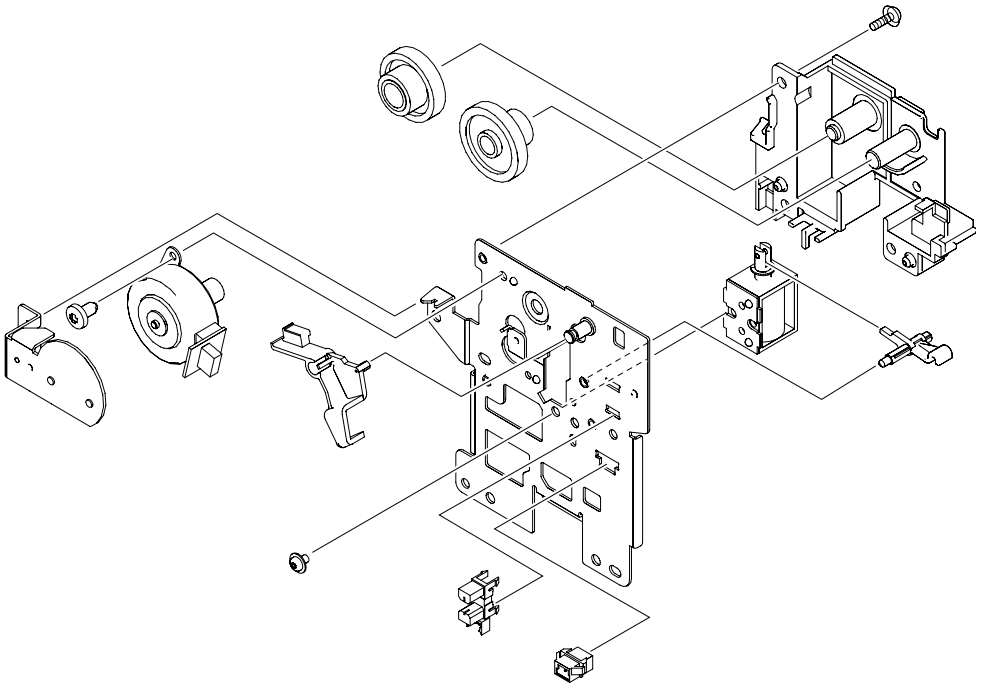

Figure 7-13 Duplexing drive assembly

Download Service Manual And Resetter Printer at http://printer1.blogspot.com

Table 7-15 Duplexing drive assembly

Ref	Description	Part number	Qty
	DUPLEXING DRIVE ASSEMBLY	RM1-1832-000CN	1

Download Service Manual And Resetter Printer at http://printer1.blogspot.com

MEMORY-CARD READER ASS'Y

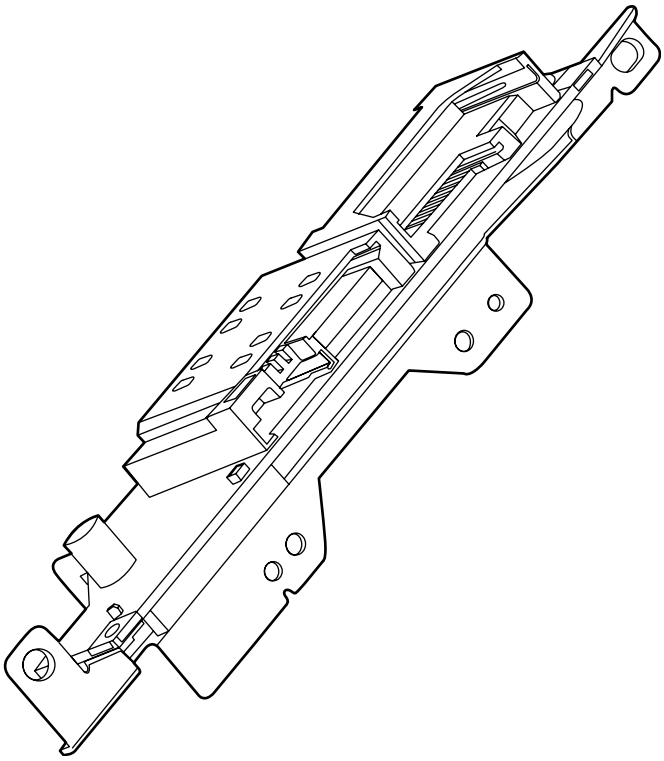

Figure 7-14 Memory-card reader assembly

Download Service Manual And Resetter Printer at http://printer1.blogspot.com

Table 7-16 Memory-card reader assembly

Ref	Description	Part number	Qty
	MEMORY-CARD READER ASSEMBLY	Q7821-67901 (DTN model only)	

Download Service Manual And Resetter Printer at http://printer1.blogspot.com

PCB ASS'Y LOCATION DIAGRAM

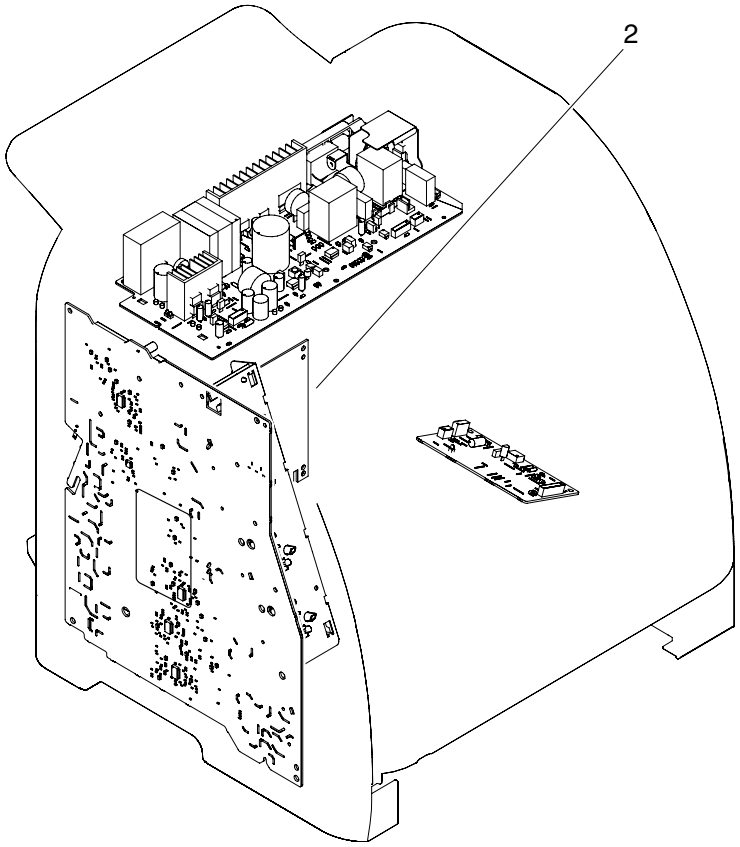

Figure 7-15 PCA assembly location

Download Service Manual And Resetter Printer at http://printer1.blogspot.com

Table 7-17 PCA assembly location

Ref	Description	Part number	Qty
2	DC CONTROLLER PCA ASSEMBLY	RM1-3423-000CN	1

Download Service Manual And Resetter Printer at http://printer1.blogspot.com

Input devices

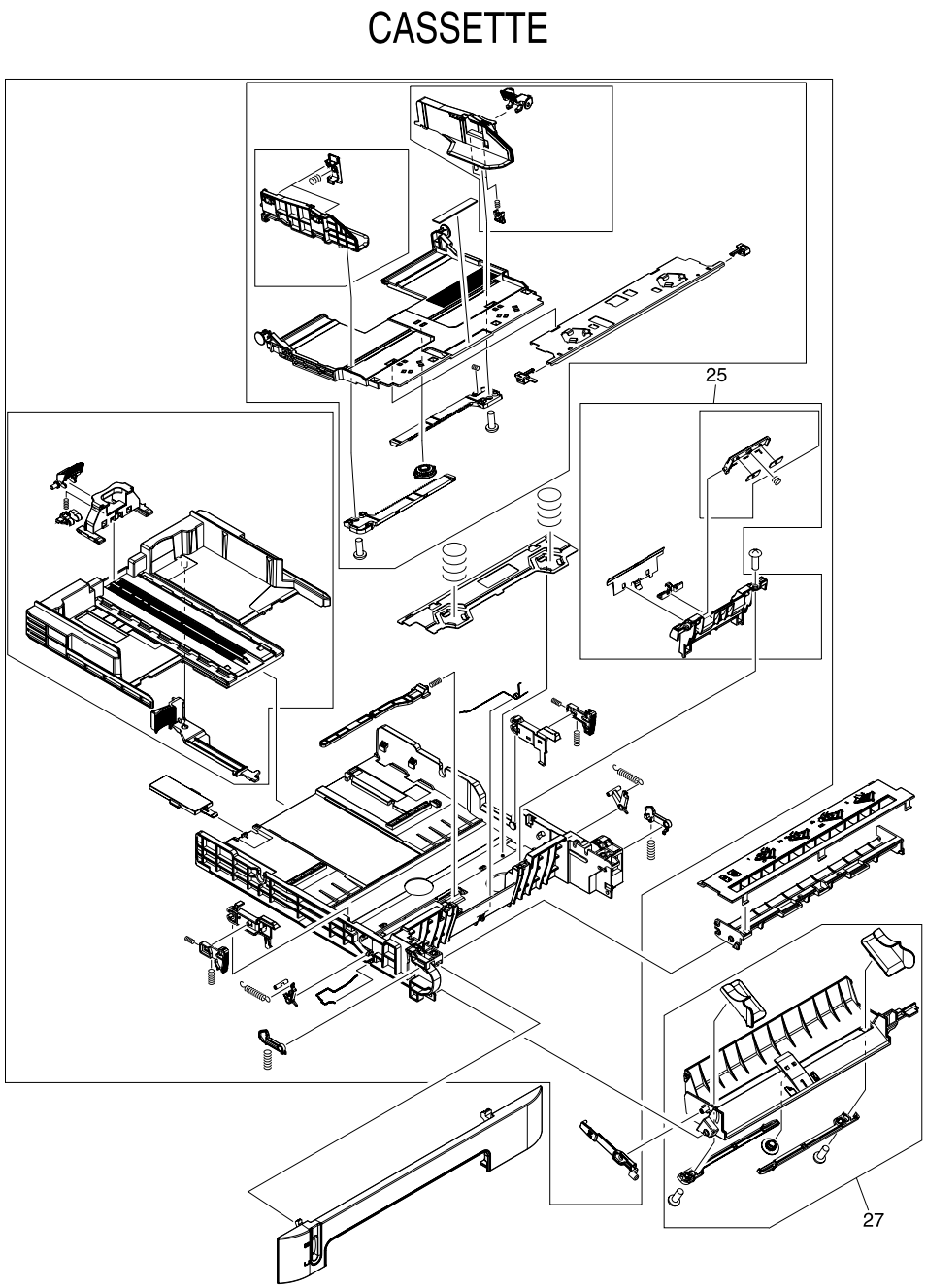

Figure 7-16 Tray 2 input tray (cassette)

Download Service Manual And Resetter Printer at http://printer1.blogspot.com

Table 7-18 Tray 2 input tray (cassette)

Ref	Description	Part number	Qty
	CASSETTE	RM1-1916-050CN	1
25	SEPARATION ASSEMBLY	RM1-1922-000CN	1
27	FEED ASSEMBLY	RM1-1923-000CN	1

Download Service Manual And Resetter Printer at http://printer1.blogspot.com

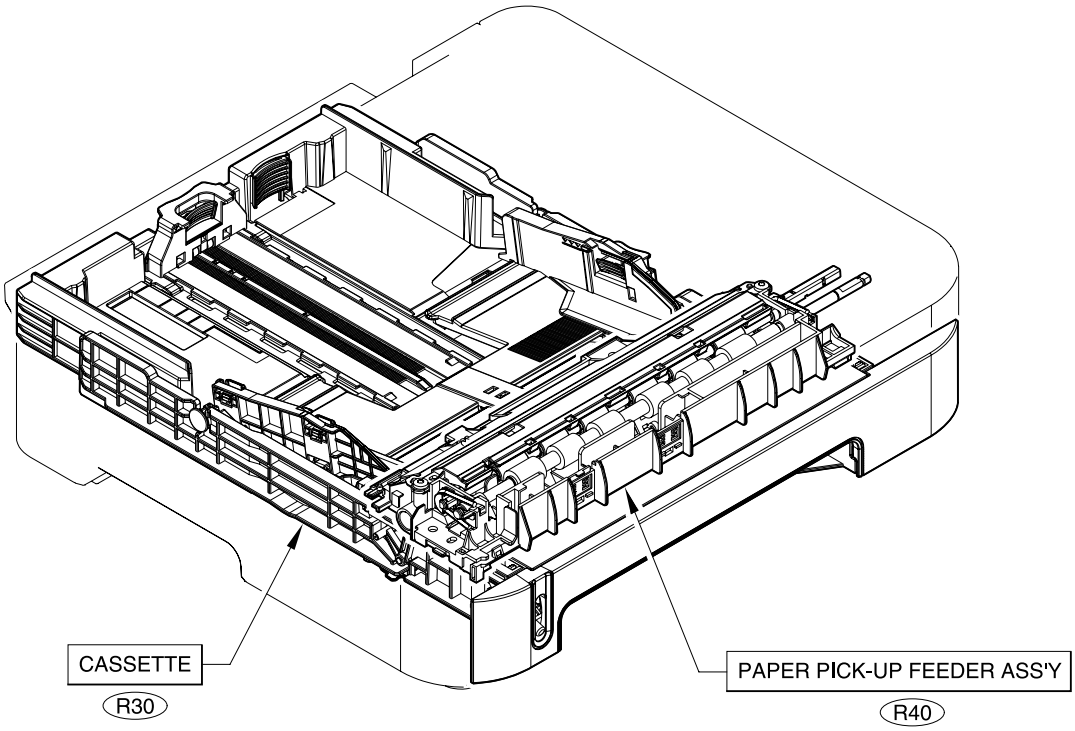

Figure 7-17 250-sheet input tray (cassette)

Download Service Manual And Resetter Printer at http://printer1.blogspot.com

Table 7-19 250-sheet input tray (cassette)

Ref	Description	Part number	Qty
R30	CASSETTE	RM1-1945-000CN	RF
R40	PAPER PICKUP ROLLER	RC1-5440-000CN	RF

Download Service Manual And Resetter Printer at http://printer1.blogspot.com

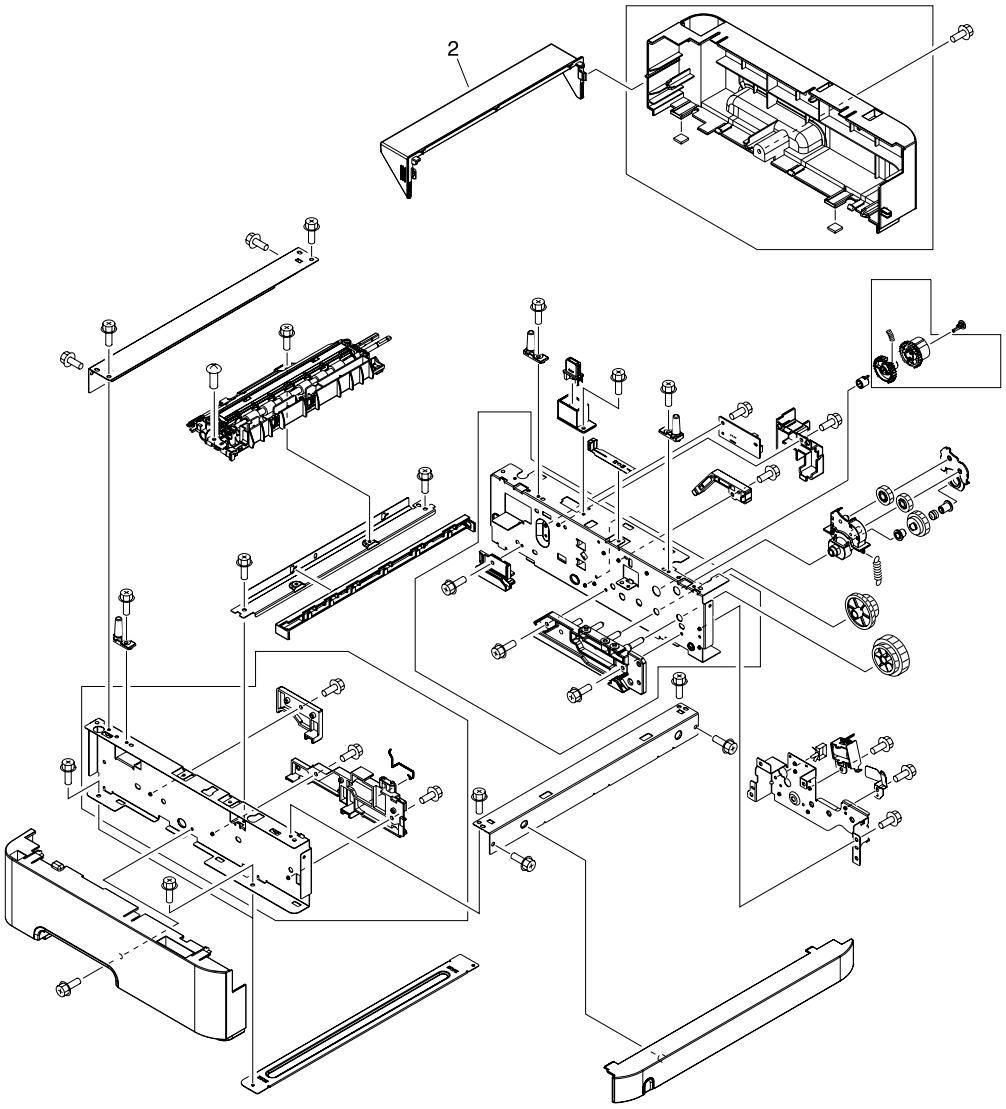

Figure 7-18 250-sheet input tray internal components

Download Service Manual And Resetter Printer at http://printer1.blogspot.com

Table 7-20 250-sheet input tray internal components

Ref	Description	Part number	Qty
2	COVER, CASSETTE DUST	RC1-5200-000CN	1

Download Service Manual And Resetter Printer at http://printer1.blogspot.com

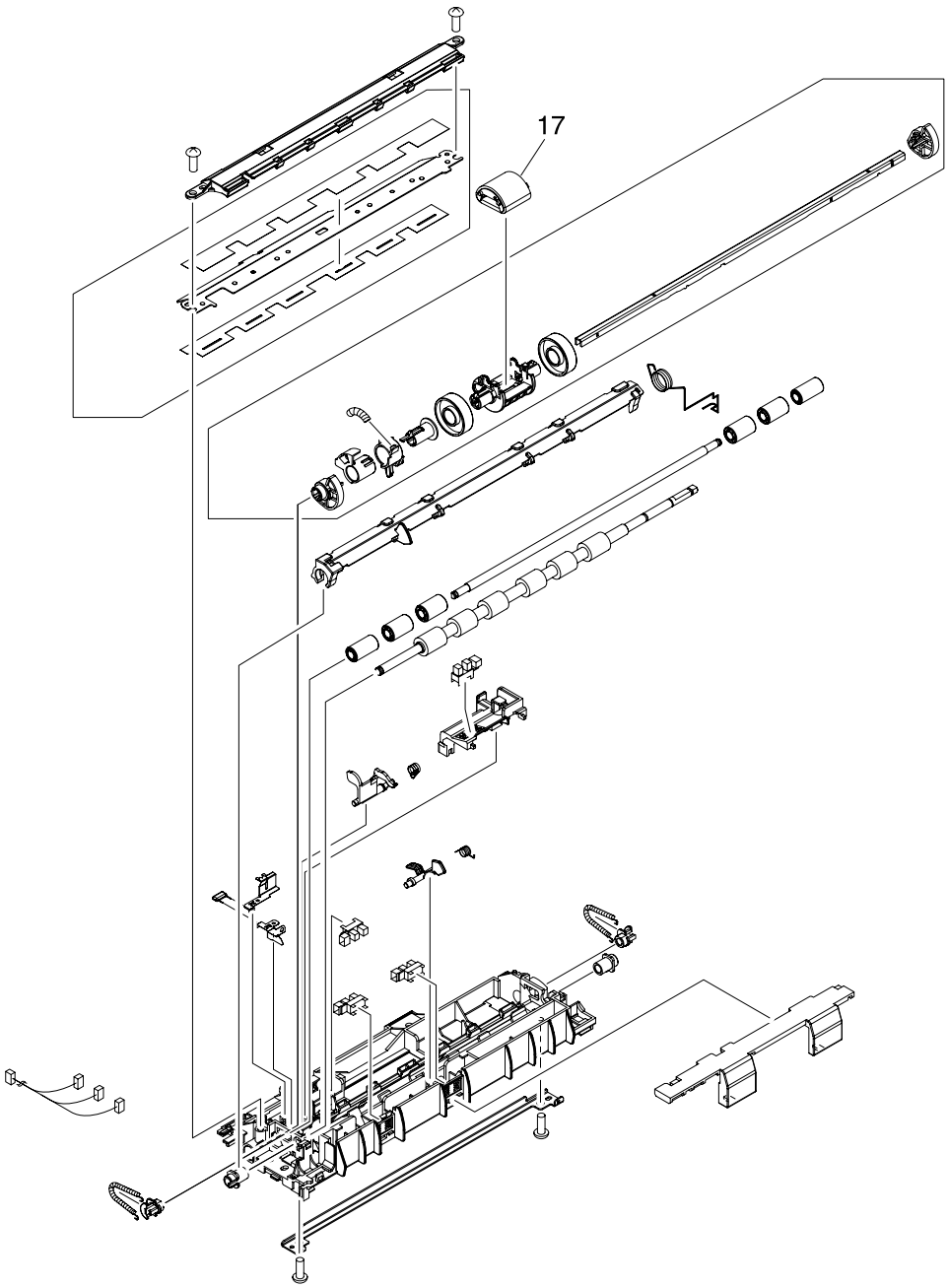

Figure 7-19 Paper pick-up feeder assembly (Tray 2)

Download Service Manual And Resetter Printer at http://printer1.blogspot.com

Table 7-21 Paper pick-up feeder assembly for Tray 2

Ref	Description	Part number	Qty
17	ROLLER, PAPER PICKUP	RC1-5440-000CN	1

Download Service Manual And Resetter Printer at http://printer1.blogspot.com

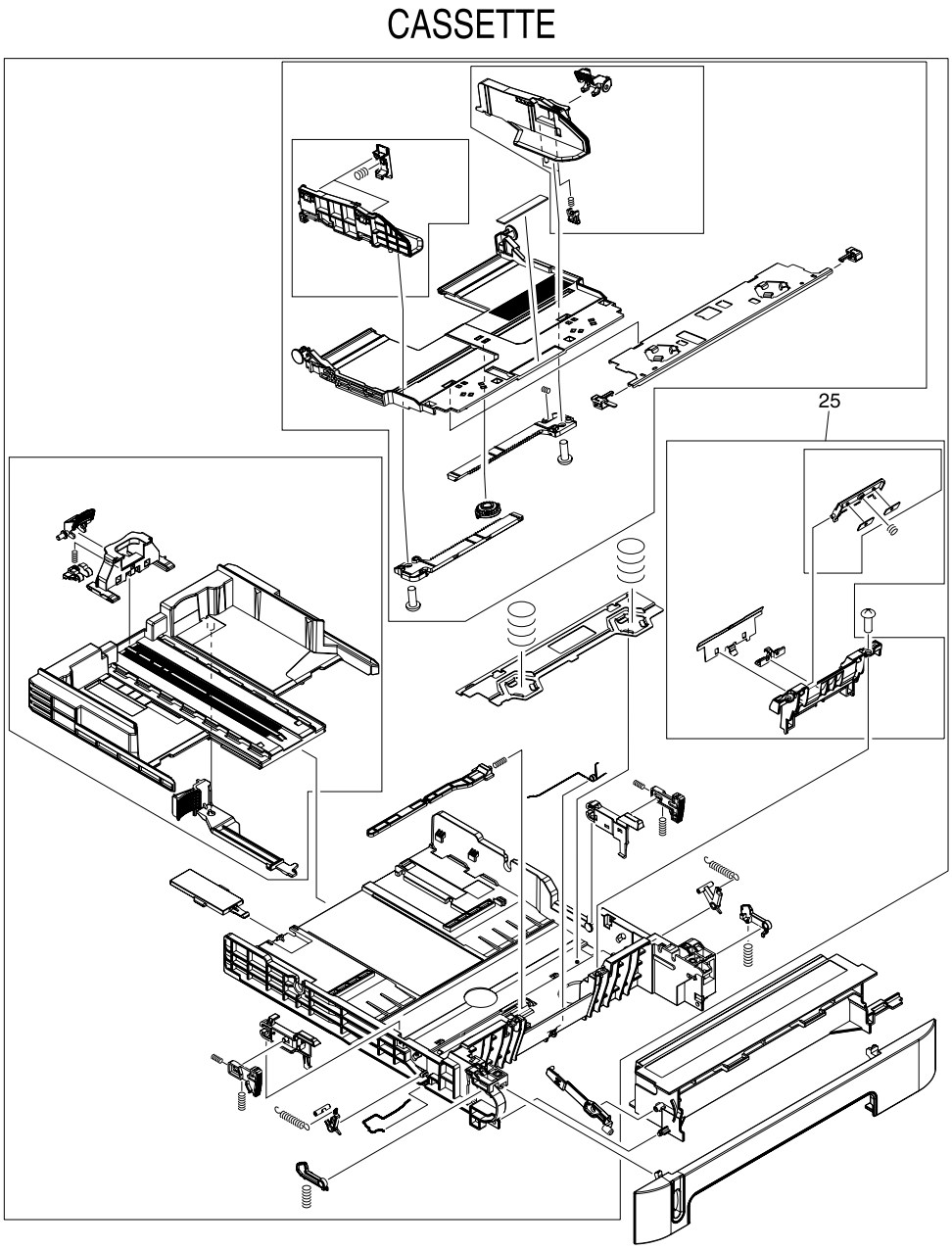

Figure 7-20 Tray 3 input tray (cassette)

Download Service Manual And Resetter Printer at http://printer1.blogspot.com

Table 7-22 Tray 3 input tray (cassette)

Ref	Description	Part number	Qty
	CASSETTE	RM1-1945-000CN	1
	PAPER PICKUP ROLLER	RC1-5440-000CN	
25	SEPARATION ASSEMBLY	RM1-1922-000CN	1

Download Service Manual And Resetter Printer at http://printer1.blogspot.com

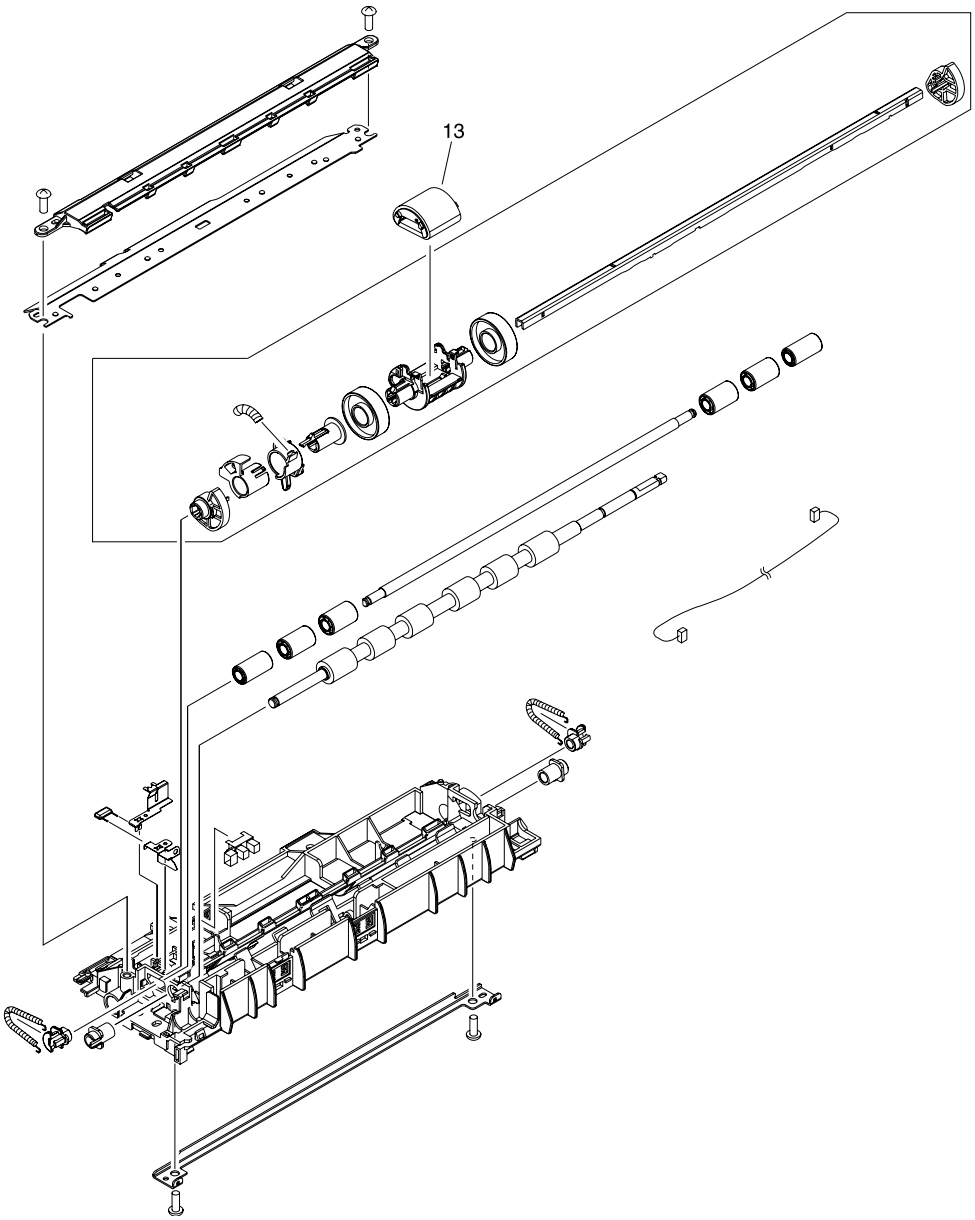

Figure 7-21 Paper pickup feeder assembly (Tray 3)

Download Service Manual And Resetter Printer at http://printer1.blogspot.com

Table 7-23 Paper pickup feeder assembly (Tray 3)

Ref	Description	Part number	Qty
13	ROLLER, PAPER PICKUP	RC1-5440-000CN	1

PCB ASS'Y LOCATION DIAGRAM (Tray 3)

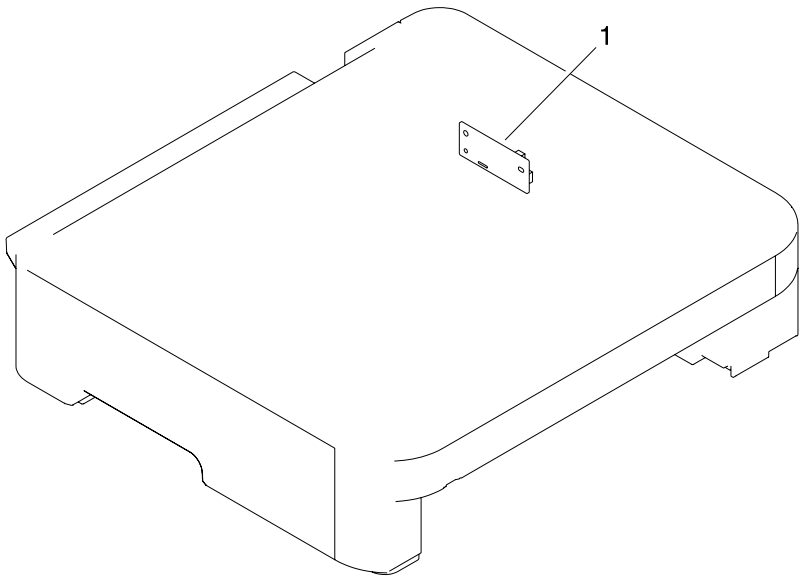

Figure 7-22 PCA assembly location in optional Tray 3

Download Service Manual And Resetter Printer at http://printer1.blogspot.com

Diagrams

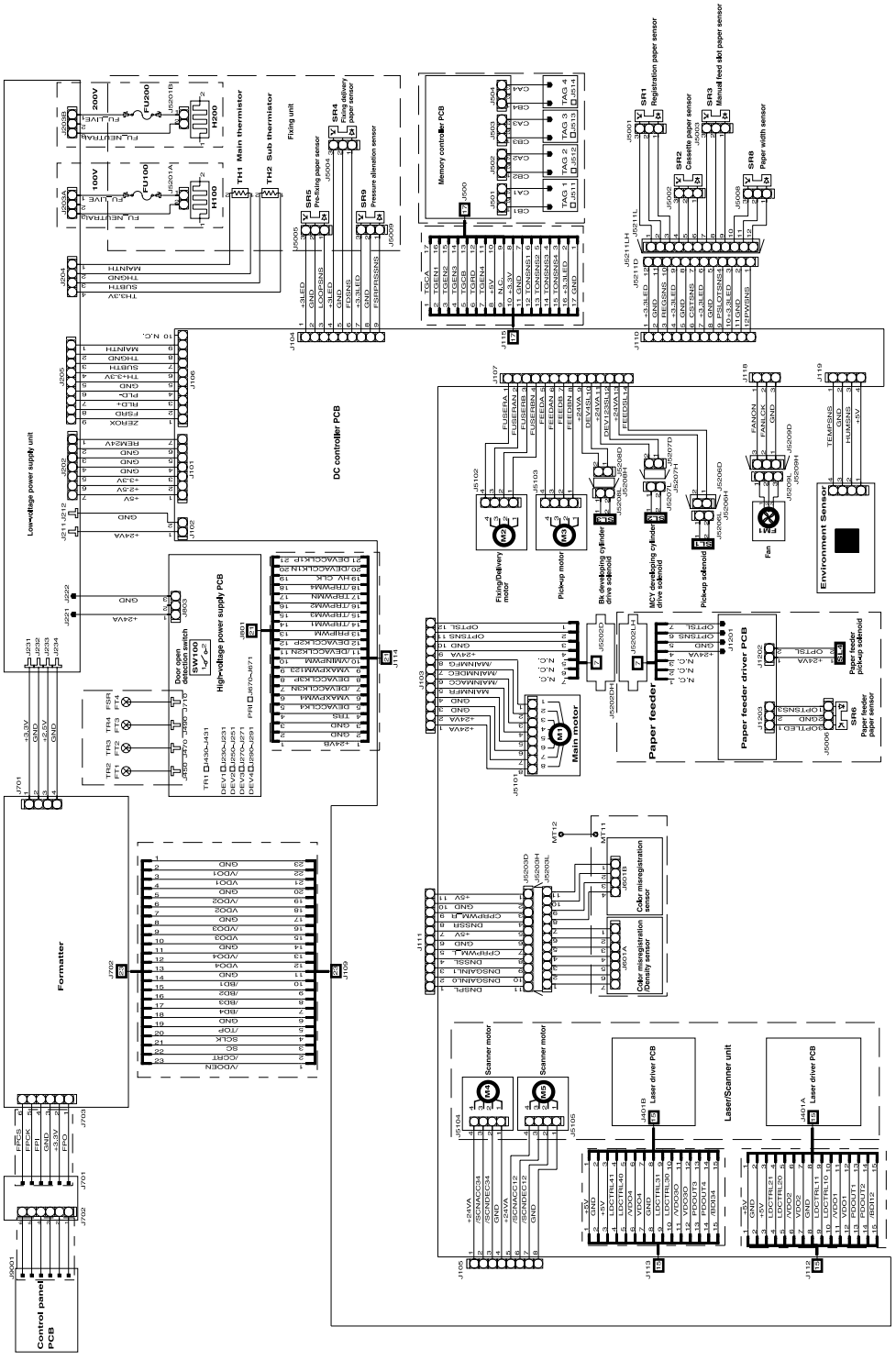

Figure 7-23 General circuit diagram

Download Service Manual And Resetter Printer at http://printer1.blogspot.com

Alphabetical parts list

Table 7-24 Alphabetical parts list

Description	Part number	Table and page
ARM, PAPER RETAINER, LEFT	RC2-0253-000CN	Fuser assembly (simplex) on page 201
ARM, PAPER RETAINER, LEFT	RC2-0215-000CN	Fuser assembly (duplex) on page 203
ARM, PAPER RETAINER, RIGHT	RC2-0254-000CN	Fuser assembly (simplex) on page 201
ARM, PAPER RETAINER, RIGHT	RC2-0216-000CN	Fuser assembly (duplex) on page 203
CASSETTE	RM1-1916-050CN	Assembly locations - simplex model on page 183
CASSETTE	RM1-1916-050CN	Assembly locations - duplex models on page 185
CASSETTE	RM1-1916-050CN	Tray 2 input tray (cassette) on page 211
CASSETTE	RM1-1945-000CN	250-sheet input tray (cassette) on page 213
CASSETTE	RM1-1945-000CN	Tray 3 input tray (cassette) on page 219
CONTROL PANEL ASSEMBLY	RM1-1861-000CN	Assembly locations - simplex model on page 183
CONTROL PANEL ASSEMBLY	RM1-1861-000CN	Assembly locations - duplex models on page 185
CONTROL PANEL ASSEMBLY	RM1-1861-000CN	Upper assembly cover - duplex models on page 191
CONTROL PANEL ASSEMBLY	RM1-1861-000CN	Control panel assembly on page 199
COVER, CASSETTE DUST	RC1-5200-000CN	External panels and covers on page 187
COVER, CASSETTE DUST	RC1-5200-000CN	250-sheet input tray internal components on page 215
COVER, CASSETTE, LEFT	RC1-5184-000CN	External panels and covers on page 187
COVER, CASSETTE, RIGHT	RC1-5188-030CN	External panels and covers on page 187
COVER, FACE-DOWN	RC1-5173-000CN	External panels and covers on page 187
COVER, INSIDE, UPPER	RC1-5178-040CN	Upper assembly cover - simplex model on page 189
COVER, INSIDE, UPPER	RC1-5179-000CN	Upper assembly cover - duplex models on page 191

Download Service Manual And Resetter Printer at http://printer1.blogspot.com

Table 7-24 Alphabetical parts list (continued)

Description	Part number	Table and page
COVER, LEFT	RC1-5183-000CN	External panels and covers on page 187
COVER, UPPER FACE	RC1-5175-000CN	Upper assembly cover - duplex models on page 191
DC CONTROLLER PCA ASSEMBLY	RM1-3423-000CN	Internal components (3 of 3) on page 197
DC CONTROLLER PCA ASSEMBLY	RM1-3423-000CN	PCA assembly location on page 209
DUPLEXING DRIVE ASSEMBLY	RM1-1832-000CN (duplex)	Assembly locations - duplex models on page 185
DUPLEXING DRIVE ASSEMBLY	RM1-1832-000CN	Internal components (1 of 3) on page 193
DUPLEXING DRIVE ASSEMBLY	RM1-1832-000CN	Duplexing drive assembly on page 205
ELECT.TRANSPORT BELT (ETB) ASSEMBLY	RM1-1892-000CN (duplex)	Internal components (2 of 3) on page 195
ELECT.TRANSPORT BELT (ETB) ASSEMBLY	RM1-1891-000CN (simplex)	Internal components (2 of 3) on page 195
FEED ASSEMBLY	RM1-1923-000CN	Tray 2 input tray (cassette) on page 211
FRONT DOOR ASSEMBLY	RM1-1856-000CN (simplex)	External panels and covers on page 187
FRONT DOOR ASSEMBLY	RM1-1857-000CN (duplex)	External panels and covers on page 187
FUSER ASSEMBLY	RM1-1828-000CN (110v) or RM1-1829-000CN (220v)	Assembly locations - simplex model on page 183
FUSER ASSEMBLY	RM1-1824-000CN (110v) or RM1-1825-000CN (220v)	Assembly locations - duplex models on page 185
FUSER ASSEMBLY	RM1-1828-000CN (110v simplex)	Internal components (2 of 3) on page 195
FUSER ASSEMBLY	RM1-1829-000CN (220v simplex)	Internal components (2 of 3) on page 195
FUSER ASSEMBLY	RM1-1824-000CN (110v duplex)	Internal components (2 of 3) on page 195
FUSER ASSEMBLY	RM1-1825-000CN (220v duplex)	Internal components (2 of 3) on page 195
FUSER ASSEMBLY	RM1-1828-000CN (110v simplex)	Fuser assembly (simplex) on page 201
FUSER ASSEMBLY	RM1-1829-000CN (220v simplex)	Fuser assembly (simplex) on page 201
FUSER ASSEMBLY	RM1-1824-000CN (110v duplex)	Fuser assembly (duplex) on page 203

Download Service Manual And Resetter Printer at http://printer1.blogspot.com

Table 7-24 Alphabetical parts list (continued)

Description	Part number	Table and page
FUSER ASSEMBLY	RM1-1825-000CN (220v duplex)	Fuser assembly (duplex) on page 203
MEMORY-CARD READER ASSEMBLY	Q7821-67901 (DTN model only)	Assembly locations - duplex models on page 185
MEMORY-CARD READER ASSEMBLY	Q7821-67901 (DTN model only)	Memory-card reader assembly on page 207
PAPER DELIVERY TRAY ASSEMBLY	RM1-1859-020CN	External panels and covers on page 187
PAPER PICKUP ROLLER	RC1-5440-000CN	250-sheet input tray (cassette) on page 213
PAPER PICKUP ROLLER	RC1-5440-000CN	Tray 3 input tray (cassette) on page 219
PLATE, REAR	RC1-5227-020CN	External panels and covers on page 187
RETAINER, PAPER	RC2-0269-000CN	Fuser assembly (simplex) on page 201
RETAINER, PAPER	RC2-0269-000CN	Fuser assembly (duplex) on page 203
RIGHT COVER ASSEMBLY	RM1-1860-000CN	External panels and covers on page 187
ROLLER, PAPER PICKUP	RC1-5440-000CN	Paper pick-up feeder assembly for Tray 2 on page 217
ROLLER, PAPER PICKUP	RC1-5440-000CN	Paper pickup feeder assembly (Tray 3) on page 221
SEPARATION ASSEMBLY	RM1-1922-000CN	Tray 2 input tray (cassette) on page 211
SEPARATION ASSEMBLY	RM1-1922-000CN	Tray 3 input tray (cassette) on page 219
SPRING, GROUNDING	RC1-5147-000CN	Internal components (2 of 3) on page 195
UPPER COVER ASSEMBLY	RM1-1862-000CN (simplex)	Assembly locations - simplex model on page 183
UPPER COVER ASSEMBLY	RM1-1855-000CN (duplex)	Assembly locations - duplex models on page 185
UPPER COVER ASSEMBLY	RM1-1855-000CN (duplex)	External panels and covers on page 187
UPPER COVER ASSEMBLY	RM1-1862-000CN (simplex)	Upper assembly cover - simplex model on page 189
UPPER COVER ASSEMBLY	RM1-1855-000CN (duplex)	Upper assembly cover - duplex models on page 191

Download Service Manual And Resetter Printer at http://printer1.blogspot.com

Numerical parts list

Table 7-25 Numerical parts list

Part number	Description	Table and page
Q7821-67901 (DTN model only)	MEMORY-CARD READER ASSEMBLY	Assembly locations - duplex models on page 185
Q7821-67901 (DTN model only)	MEMORY-CARD READER ASSEMBLY	Memory-card reader assembly on page 207
RC1-5147-000CN	SPRING, GROUNDING	Internal components (2 of 3) on page 195
RC1-5173-000CN	COVER, FACE-DOWN	External panels and covers on page 187
RC1-5175-000CN	COVER, UPPER FACE	Upper assembly cover - duplex models on page 191
RC1-5178-040CN	COVER, INSIDE, UPPER	Upper assembly cover - simplex model on page 189
RC1-5179-000CN	COVER, INSIDE, UPPER	Upper assembly cover - duplex models on page 191
RC1-5183-000CN	COVER, LEFT	External panels and covers on page 187
RC1-5184-000CN	COVER, CASSETTE, LEFT	External panels and covers on page 187
RC1-5188-030CN	COVER, CASSETTE, RIGHT	External panels and covers on page 187
RC1-5200-000CN	COVER, CASSETTE DUST	External panels and covers on page 187
RC1-5200-000CN	COVER, CASSETTE DUST	250-sheet input tray internal components on page 215
RC1-5227-020CN	PLATE, REAR	External panels and covers on page 187
RC1-5440-000CN	PAPER PICKUP ROLLER	250-sheet input tray (cassette) on page 213
RC1-5440-000CN	ROLLER, PAPER PICKUP	Paper pick-up feeder assembly for Tray 2 on page 217
RC1-5440-000CN	PAPER PICKUP ROLLER	Tray 3 input tray (cassette) on page 219
RC1-5440-000CN	ROLLER, PAPER PICKUP	Paper pickup feeder assembly (Tray 3) on page 221
RC2-0215-000CN	ARM, PAPER RETAINER, LEFT	Fuser assembly (duplex) on page 203
RC2-0216-000CN	ARM, PAPER RETAINER, RIGHT	Fuser assembly (duplex) on page 203
RC2-0253-000CN	ARM, PAPER RETAINER, LEFT	Fuser assembly (simplex) on page 201

Download Service Manual And Resetter Printer at http://printer1.blogspot.com

Table 7-25 Numerical parts list (continued)

Part number	Description	Table and page
RC2-0254-000CN	ARM, PAPER RETAINER, RIGHT	Fuser assembly (simplex) on page 201
RC2-0269-000CN	RETAINER, PAPER	Fuser assembly (simplex) on page 201
RC2-0269-000CN	RETAINER, PAPER	Fuser assembly (duplex) on page 203
RM1-1824-000CN (110v duplex)	FUSER ASSEMBLY	Internal components (2 of 3) on page 195
RM1-1824-000CN (110v duplex)	FUSER ASSEMBLY	Fuser assembly (duplex) on page 203
RM1-1824-000CN (110v) or RM1-1825-000CN (220v)	FUSER ASSEMBLY	Assembly locations - duplex models on page 185
RM1-1825-000CN (220v duplex)	FUSER ASSEMBLY	Internal components (2 of 3) on page 195
RM1-1825-000CN (220v duplex)	FUSER ASSEMBLY	Fuser assembly (duplex) on page 203
RM1-1828-000CN (110v simplex)	FUSER ASSEMBLY	Internal components (2 of 3) on page 195
RM1-1828-000CN (110v simplex)	FUSER ASSEMBLY	Fuser assembly (simplex) on page 201
RM1-1828-000CN (110v) or RM1-1829-000CN (220v)	FUSER ASSEMBLY	Assembly locations - simplex model on page 183
RM1-1829-000CN (220v simplex)	FUSER ASSEMBLY	Internal components (2 of 3) on page 195
RM1-1829-000CN (220v simplex)	FUSER ASSEMBLY	Fuser assembly (simplex) on page 201
RM1-1832-000CN	DUPLEXING DRIVE ASSEMBLY	Internal components (1 of 3) on page 193
RM1-1832-000CN	DUPLEXING DRIVE ASSEMBLY	Duplexing drive assembly on page 205
RM1-1832-000CN (duplex)	DUPLEXING DRIVE ASSEMBLY	Assembly locations - duplex models on page 185
RM1-1855-000CN (duplex)	UPPER COVER ASSEMBLY	Assembly locations - duplex models on page 185
RM1-1855-000CN (duplex)	UPPER COVER ASSEMBLY	External panels and covers on page 187
RM1-1855-000CN (duplex)	UPPER COVER ASSEMBLY	Upper assembly cover - duplex models on page 191
RM1-1856-000CN (simplex)	FRONT DOOR ASSEMBLY	External panels and covers on page 187
RM1-1857-000CN (duplex)	FRONT DOOR ASSEMBLY	External panels and covers on page 187

Download Service Manual And Resetter Printer at http://printer1.blogspot.com

Table 7-25 Numerical parts list (continued)

Part number	Description	Table and page
RM1-1859-020CN	PAPER DELIVERY TRAY ASSEMBLY	External panels and covers on page 187
RM1-1860-000CN	RIGHT COVER ASSEMBLY	External panels and covers on page 187
RM1-1861-000CN	CONTROL PANEL ASSEMBLY	Assembly locations - simplex model on page 183
RM1-1861-000CN	CONTROL PANEL ASSEMBLY	Assembly locations - duplex models on page 185
RM1-1861-000CN	CONTROL PANEL ASSEMBLY	Upper assembly cover - duplex models on page 191
RM1-1861-000CN	CONTROL PANEL ASSEMBLY	Control panel assembly on page 199
RM1-1862-000CN (simplex)	UPPER COVER ASSEMBLY	Assembly locations - simplex model on page 183
RM1-1862-000CN (simplex)	UPPER COVER ASSEMBLY	Upper assembly cover - simplex model on page 189
RM1-1891-000CN (simplex)	ELECT.TRANSPORT BELT (ETB) ASSEMBLY	Internal components (2 of 3) on page 195
RM1-1892-000CN (duplex)	ELECT.TRANSPORT BELT (ETB) ASSEMBLY	Internal components (2 of 3) on page 195
RM1-1916-050CN	CASSETTE	Assembly locations - simplex model on page 183
RM1-1916-050CN	CASSETTE	Assembly locations - duplex models on page 185
RM1-1916-050CN	CASSETTE	Tray 2 input tray (cassette) on page 211
RM1-1922-000CN	SEPARATION ASSEMBLY	Tray 2 input tray (cassette) on page 211
RM1-1922-000CN	SEPARATION ASSEMBLY	Tray 3 input tray (cassette) on page 219
RM1-1923-000CN	FEED ASSEMBLY	Tray 2 input tray (cassette) on page 211
RM1-1945-000CN	CASSETTE	250-sheet input tray (cassette) on page 213
RM1-1945-000CN	CASSETTE	Tray 3 input tray (cassette) on page 219
RM1-3423-000CN	DC CONTROLLER PCA ASSEMBLY	Internal components (3 of 3) on page 197
RM1-3423-000CN	DC CONTROLLER PCA ASSEMBLY	PCA assembly location on page 209

Download Service Manual And Resetter Printer at http://printer1.blogspot.com

A Specifications

This section contains information about printer specifications.

- Printer specifications

Download Service Manual And Resetter Printer at http://printer1.blogspot.com

Printer specifications

Table A-1 Physical specifications

Product	Height	Depth	Width	Weight
HP Color LaserJet 2605 printer with consumables	370 mm (14.69 inches)	412 mm (16.24 inches)	407 mm (16.02 inches)	18.55 kg (40.91 lbs)
HP Color LaserJet 2605dn printer with consumables	395 mm (15.54 inches)	412 mm (16.24 inches)	407 mm (16.02 inches)	19.87 kg (43.82 lbs)
HP Color LaserJet 2605dtn printer with consumables and Tray 3	492 mm (19.36 inches)	412 mm (16.24 inches)	407 mm (16.02 inches)	23.63 kg (52.10 lbs)

Table A-2 Supplies specifications

Print-cartridge life (based on approximately 5% coverage)	Black: 2,500 pages Yellow, cyan, and magenta: 2,000 pages each

Table A-3 Electrical specifications

Item	110-Volt models	220-Volt models
Power requirements[1]	115-127V (+/-10%) 50/60 Hz (+/- 2 Hz)	220-240V (+/-10%) 50/60 Hz (+/- 2 Hz)
Rated current	3.6 amps	2.5 amps
Power consumption (average, in watts)		
During printing (color)[2]	234 W (average)	234 W (average)
During printing (black and white)[2]	251 W (average)	251 W (average)
During standby	15 W (average)	15 W (average)
Off mode	0 W (average)	0 W (average)
Heat output[3] Ready Mode	55 BTU/hour	55 BTU/hour

1 Values subject to change, see http://www.hp.com/support/clj2605 for current information.
2 Power reported is highest values measured for color and monochrome printing using all standard voltages.
3 Maximum heat dissipation for all models in Ready Mode = 55 BTU/hour

WARNING! Power requirements are based on the country/region where the printer is sold. Do not convert operating voltages. This may damage the printer and void the product warranty.

Download Service Manual And Resetter Printer at http://printer1.blogspot.com

Table A-4 Environmental specifications

	Recommended[1]	Operating[1]	Storage[1]
(printer and print cartridge) Temperature	20° to 27°C (68° to 81°F)	15° to 32.5°C (59° to 90.5°F)	-20° to 40°C (-4° to 104°F)
Relative humidity	20% to 70%	10% to 80%	95% or less

[1] Values are subject to change. See http://www.hp.com/support/clj2605 for current information.

Table A-5 Acoustic emissions[1]

Sound Power Level	**Declared per ISO 9296[1]**
Printing (12 ppm)[2]	L_{WAd} = 6.0 Bels (A) [60 dB (A)]
Ready	Inaudible
Sound Pressure Level (SPL)-Bystander Position	**Declared per ISO 9296[1]**
Printing (12 ppm)[2]	L_{pAm} = 47 dB(A)
Ready	Inaudible

[1] Values are subject to change. See http://www.hp.com/support/clj2605 for current information.
[2] HP Color LaserJet 2605 Series speed is 10 ppm for color and 12 ppm for monochrome.

Download Service Manual And Resetter Printer at http://printer1.blogspot.com

Download Service Manual And Resetter Printer at http://printer1.blogspot.com

B Service and support

Download Service Manual And Resetter Printer at http://printer1.blogspot.com

Hewlett-Packard limited warranty statement

HP PRODUCT	DURATION OF LIMITED WARRANTY
HP Color LaserJet 2605 Series	1 year, Limited Warranty

HP warrants to you, the end-user customer, that HP hardware and accessories will be free from defects in materials and workmanship after the date of purchase, for the period specified above. If HP receives notice of such defects during the warranty period, HP will, at its option, either repair or replace products which prove to be defective. Replacement products may be either new or equivalent in performance to new.

HP warrants to you that HP software will not fail to execute its programming instructions after the date of purchase, for the period specified above, due to defects in material and workmanship when properly installed and used. If HP receives notice of such defects during the warranty period, HP will replace software which does not execute its programming instructions due to such defects.

HP does not warrant that the operation of HP products will be uninterrupted or error free. If HP is unable, within a reasonable time, to repair or replace any product to a condition as warranted, you will be entitled to a refund of the purchase price upon prompt return of the product.

HP products may contain remanufactured parts equivalent to new in performance or may have been subject to incidental use.

Warranty does not apply to defects resulting from (a) improper or inadequate maintenance or calibration, (b) software, interfacing, parts or supplies not supplied by HP, (c) unauthorized modification or misuse, (d) operation outside of the published environmental specifications for the product, or (e) improper site preparation or maintenance.

TO THE EXTENT ALLOWED BY LOCAL LAW, THE ABOVE WARRANTIES ARE EXCLUSIVE AND NO OTHER WARRANTY OR CONDITION, WHETHER WRITTEN OR ORAL, IS EXPRESSED OR IMPLIED AND HP SPECIFICALLY DISCLAIMS ANY IMPLIED WARRANTIES OR CONDITIONS OF MERCHANTABILITY, SATISFACTORY QUALITY, AND FITNESS FOR A PARTICULAR PURPOSE. Some countries/regions, states or provinces do not allow limitations on the duration of an implied warranty, so the above limitation or exclusion might not apply to you. This warranty gives you specific legal rights and you might also have other rights that vary from country/region to country/region, state to state, or province to province. HP's limited warranty is valid in any country/region or locality where HP has a support presence for this product and where HP has marketed this product. The level of warranty service you receive may vary according to local standards. HP will not alter form, fit or function of the product to make it operate in a country/region for which it was never intended to function for legal or regulatory reasons.

TO THE EXTENT ALLOWED BY LOCAL LAW, THE REMEDIES IN THIS WARRANTY STATEMENT ARE YOUR SOLE AND EXCLUSIVE REMEDIES. EXCEPT AS INDICATED ABOVE, IN NO EVENT WILL HP OR ITS SUPPLIERS BE LIABLE FOR LOSS OF DATA OR FOR DIRECT, SPECIAL, INCIDENTAL, CONSEQUENTIAL (INCLUDING LOST PROFIT OR DATA), OR OTHER DAMAGE, WHETHER BASED IN CONTRACT, TORT, OR OTHERWISE. Some countries/regions, states or provinces do not allow the exclusion or limitation of incidental or consequential damages, so the above limitation or exclusion may not apply to you.

THE WARRANTY TERMS CONTAINED IN THIS STATEMENT, EXCEPT TO THE EXTENT LAWFULLY PERMITTED, DO NOT EXCLUDE, RESTRICT OR MODIFY AND ARE IN ADDITION TO THE MANDATORY STATUTORY RIGHTS APPLICABLE TO THE SALE OF THIS PRODUCT TO YOU.

Download Service Manual And Resetter Printer at http://printer1.blogspot.com

Print Cartridge Limited Warranty Statement

This HP product is warranted to be free from defects in materials and workmanship.

This warranty does not apply to products that (a) have been refilled, refurbished, remanufactured or tampered with in any way, (b) experience problems resulting from misuse, improper storage, or operation outside of the published environmental specifications for the printer product or (c) exhibit wear from ordinary use.

To obtain warranty service, please return the product to place of purchase (with a written description of the problem and print samples) or contact HP Customer Support. At HP's option, HP will either replace products that prove to be defective or refund your purchase price.

TO THE EXTENT ALLOWED BY LOCAL LAW, THE ABOVE WARRANTY IS EXCLUSIVE AND NO OTHER WARRANTY OR CONDITION, WHETHER WRITTEN OR ORAL, IS EXPRESSED OR IMPLIED AND HP SPECIFICALLY DISCLAIMS ANY IMPLIED WARRANTIES OR CONDITIONS OF MERCHANTABILITY, SATISFACTORY QUALITY, AND FITNESS FOR A PARTICULAR PURPOSE.

TO THE EXTENT ALLOWED BY LOCAL LAW, IN NO EVENT WILL HP OR ITS SUPPLIERS BE LIABLE FOR DIRECT, SPECIAL, INCIDENTAL, CONSEQUENTIAL (INCLUDING LOST PROFIT OR DATA), OR OTHER DAMAGE, WHETHER BASED IN CONTRACT, TORT, OR OTHERWISE.

THE WARRANTY TERMS CONTAINED IN THIS STATEMENT, EXCEPT TO THE EXTENT LAWFULLY PERMITTED, DO NOT EXCLUDE, RESTRICT OR MODIFY AND ARE IN ADDITION TO THE MANDATORY STATUTORY RIGHTS APPLICABLE TO THE SALE OF THIS PRODUCT TO YOU.

Download Service Manual And Resetter Printer at http://printer1.blogspot.com

HP Customer Care

Online services

for 24-hour access to information by using a modem or Internet connection

World Wide Web: Updated HP printer software, product and support information, and printer drivers in several languages can be obtained from http://www.hp.com/support/clj2605. (The site is in English.)

Online troubleshooting tools

HP Instant Support Professional Edition (ISPE) is a suite of Web-based troubleshooting tools for desktop computing and printing products. ISPE helps you quickly identify, diagnose, and resolve computing and printing problems. The ISPE tools can be accessed from http://instantsupport.hp.com.

Telephone support

Hewlett-Packard provides free telephone support during the warranty period. When you call, you will be connected to a responsive team that is waiting to help you. For the telephone number for your country/region, see the flyer that came in the box with the product, or visit http://www.hp.com and then click **Contact HP**. Before calling HP, have the following information ready: product name and serial number, date of purchase, and description of the problem.

You can also find support on the Internet at http://www.hp.com. Click the **support & drivers** block.

Software utilities, drivers, and electronic information

Go to http://www.hp.com/go/clj2605_software. (The site is in English, but printer drivers can be downloaded in several languages.)

For information over the telephone, see the flyer that came in the box with the printer.

HP direct ordering for accessories or supplies

Order supplies from the following websites:

North America: https//www.hp.com/post-embed/ordersupplies-na

Latin America: https//www.hp.com/post-embed/ordersupplies-la

Europe and Middle East: https//www.hp.com/post-embed/ordersupplies-emea

Asia Pacific countries/regions: https//www.hp.com/post-embed/ordersupplies-ap

Order accessories from http://www.hp.com and click **Supplies & Accessories**. For more information, see the *HP Color LaserJet 2605, 2605dn, 2605dtn User Guide*.

To order supplies or accessories over the telephone, call the following numbers:

United States: 1-800-538-8787

Canada: 1-800-387-3154

To find the telephone numbers for other countries/regions, see the flyer that came in the box with the printer.

HP service information

Download Service Manual And Resetter Printer at http://printer1.blogspot.com

To locate HP-Authorized Dealers in the United States or Canada, call 1-800-243-9816 (United States) or 1-800-387-3867 (Canada). Or, go to http://www.hp.com/go/cposupportguide.

For service for your HP product in other countries/regions, call the HP Customer Support telephone number for your country/region. See the flyer that came in the box with the printer.

HP service agreements

Call: 1-800-HPINVENT [1-800-474-6836 (U.S.)] or 1-800-268-1221 (Canada).

Out-of-Warranty Service: 1-800-633-3600.

Extended Service: Call 1-800-HPINVENT 1-800-474-6836 (U.S.) or 1-800-268-1221 (Canada). Or, go to the HP Supportpack and Carepaq™ Services Web site at http://www.hpexpress-services.com/10467a.

HP ToolboxFX

To check the printer status and settings and to view troubleshooting information and online documentation, use the HP ToolboxFX software. You can view the HP ToolboxFX when the printer is directly connected to your computer or when it is connected to a network. You must have performed a complete software installation to use the HP ToolboxFX. See HP ToolboxFX on page 171.

Download Service Manual And Resetter Printer at http://printer1.blogspot.com

Availability of support and service

Around the world, HP provides a variety of service and support options for purchase. Availability of these programs will vary depending upon your location.

HP Care Pack™ Services and Service Agreements

HP has various service and support options that meet a wide range of needs. These options are not part of the standard warranty. Support services may vary by location. For most printers HP offers both in-warranty and post-warranty HP Care Pack Services and Service Agreements.

To identify service and support options for this printer go to http://www.hpexpress-services.com/10467a and type the printer model number. In North America, Service Agreement information can be obtained through HP Customer Care. Call 1-800-HPINVENT 1-800-474-6836 (U.S.) or 1-800-268-1221 (Canada). In other countries/regions please contact your country/region specific HP Customer Care Center. See the inbox flyer or go to http://www.hp.com for the HP Customer Care telephone number in your country/region.

Download Service Manual And Resetter Printer at http://printer1.blogspot.com

Repacking the printer

If your printer needs to be moved or shipped to another location, perform the following procedure to repack the printer.

CAUTION Shipping damage as a result of inadequate packing is the customer's responsibility. To ensure proper protection during shipment, the printer must be repackaged properly using the original cushions.

To repack the printer

CAUTION It is *extremely important* to remove the print cartridges before shipping the printer. Print cartridges left in the printer during shipping will leak and entirely cover the printer engine and other parts with toner.

To prevent damage to the print cartridge, avoid touching the roller, and store the print cartridge in its original packing material or so that it is not exposed to light.

1. Remove and retain all four print cartridges.
2. If you have added optional Tray 3, remove and retain.
3. Remove and retain the power cable and interface cable.
4. Remove and retain the optional external print server, if you have one.
5. If possible, include print samples and 50 to 100 sheets of paper or other print media that did not print correctly.
6. Use the original shipping container and packing material, if possible. If you have already disposed of the printer packing material, contact a local mailing service for information about repacking the printer. HP recommends insuring the equipment for shipment.
7. Include a completed copy of the Service information form on page 240.
8. In the U.S., call HP Customer Care to request new packing material. In other areas, use the original packing material, if possible. Hewlett-Packard recommends insuring the equipment for shipment.

Download Service Manual And Resetter Printer at http://printer1.blogspot.com

Service information form

WHO IS RETURNING THE EQUIPMENT?		Date:
Person to contact:		Phone:
Alternate contact:		Phone:
Return shipping address:	Special shipping instructions:	

WHAT ARE YOU SENDING?		
Model name:	Model number:	Serial number:
Please attach any relevant printouts. Do NOT ship accessories (manuals, cleaning supplies, and so on) that are not required to complete the repair.		
HAVE YOU REMOVED THE PRINT CARTRIDGES?		
You must remove them before shipping the printer, unless a mechanical problem prevents you from doing so.		
[ ] Yes.	[ ] No, I cannot remove them.	
WHAT NEEDS TO BE DONE? (Attach a separate sheet if necessary.)		
1. Describe the conditions of the failure. (What was the failure? What were you doing when the failure occurred? What software were you running? Is the failure repeatable?)		
2. If the failure is intermittent, how much time elapses between failures?		
3. If the unit connected to any of the following, give the manufacturer and model number.		
Personal computer:	Modem:	Network:
4. Additional comments:		

HOW WILL YOU PAY FOR THE REPAIR?		
[ ] Under warranty	Purchase/received date:	
(Attach proof of purchase or receiving document with original received date.)		
[ ] Maintenance contract number:		
[ ] Purchase order number:		
Except for contract and warranty service, a purchase order number and/or authorized signature must accompany any request for service. If standard repair prices do not apply, a minimum purchase order is required. Standard repair prices can be obtained by contacting an HP-authorized repair center.		
Authorized signature:		Phone:
Billing address:	Special billing instructions:	

Download Service Manual And Resetter Printer at http://printer1.blogspot.com

C Regulatory information

This section contains the following information:

- Introduction
- FCC regulations
- Environmental Product Stewardship program
- Declaration of conformity
- Country/region-specific safety statements

Download Service Manual And Resetter Printer at http://printer1.blogspot.com

Introduction

This section contains the following regulatory information:

- FCC regulations on page 243
- Environmental Product Stewardship program on page 244
- Service and support on page 233
- Declaration of conformity on page 247
- Laser safety statement on page 248
- Canadian DOC statement on page 248
- Korean EMI statement on page 248
- VCCI statement (Japan) on page 248
- Finnish laser statement on page 249

Download Service Manual And Resetter Printer at http://printer1.blogspot.com

FCC regulations

This equipment has been tested and found to comply with the limits for a Class B digital device, pursuant to Part 15 of the FCC rules. These limits are designed to provide reasonable protection against harmful interference in a residential installation. This equipment generates, uses, and can radiate radio frequency energy. If this equipment is not installed and used in accordance with the instructions, it may cause harmful interference to radio communications. However, there is no guarantee that interference will not occur in a particular installation; the presence of interference can be determined by turning the equipment off and on. If this equipment does cause harmful interference to radio or television communications, the user is encouraged to try to correct the interference by one or more of the following measures:

- Reorient or relocate the receiving antenna.
- Increase distance between equipment and receiver.
- Connect equipment to an outlet on a circuit different from that to which the receiver is located.
- Consult your dealer or an experienced radio/television technician.

NOTE Any changes or modifications to the printer that are not expressly approved by HP could void the user's authority to operate this equipment.

Use of a shielded interface cable is required to comply with the Class B limits of Part 15 of FCC rules.

Download Service Manual And Resetter Printer at http://printer1.blogspot.com

Environmental Product Stewardship program

Protecting the environment

Hewlett-Packard Company is committed to providing quality products in an environmentally sound manner. This product has been designed with several attributes to minimize impacts on our environment.

Ozone production

This product generates no appreciable ozone gas (O_3).

Power consumption

Power usage drops significantly while in sleep mode, which saves natural resources and saves money without affecting the high performance of this product. This product qualifies for ENERGY STAR® (Version 3.0), which is a voluntary program to encourage the development of energy-efficient office products.

ENERGY STAR® and the ENERGY STAR mark are U.S. registered marks. As an ENERGY STAR® partner, Hewlett-Packard Company has determined that this product meets ENERGY STAR® Guidelines for energy efficiency. For more information, see http://www.energystar.gov/.

Paper use

This product's duplex feature (two-sided printing) and N-up printing [multiple pages printed on one page] capability can reduce paper usage and the resulting demands on natural resources.

Plastics

Plastic parts over 25 grams are marked according to international standards that enhance the ability to identify plastics for recycling purposes at the end of the product’s life.

HP LaserJet printing supplies

It is easy to return and recycle your empty HP LaserJet print cartridges—free of charge—with HP Planet Partners. HP is committed to providing inventive, high-quality products and services that are environmentally sound, from product design and manufacturing to distribution, operation and recycling processes. We ensure your returned HP LaserJet print cartridges are recycled properly, processing them to recover valuable plastics and metals for new products and diverting millions of tons of waste from landfills. Since this cartridge is being recycled and used in new materials, it will not be returned to you. Your empty HP LaserJet print cartridges are recycled responsibly when you participate in the HP Planet Partners program. Thank you for being environmentally responsible!

In many countries/regions, this product's printing supplies (for example, print cartridge) can be returned to HP through the HP Printing Supplies Returns and Recycling Program. An easy-to-use and free takeback program is available in over 35 countries/regions. Multi-lingual program

Download Service Manual And Resetter Printer at http://printer1.blogspot.com

information and instructions are included in every new HP LaserJet print cartridge and supplies package.

HP Printing Supplies Returns and Recycling Program Information

Since 1992, HP has offered HP LaserJet supplies return and recycling free of charge. In 2004, HP Planet Partners for LaserJet Supplies was available in 85% of the world market where HP LaserJet supplies are sold. Postage-paid and pre-addressed labels are included within the instruction guide in most HP LaserJet print cartridge boxes. Labels and bulk boxes are also available through the website: http://www.hp.com/recycle.

Use the label to return empty, original HP LaserJet cartridges only. Please do not use this label for, non-HP cartridges, refilled or remanufactured cartridges or warranty returns. Printing supplies or other objects inadvertently sent to the HP Planet Partners program cannot be returned.

More than 10 million HP LaserJet print cartridges were recycled globally in 2004 through the HP Planet Partners supplies recycling program. This record number represents 26 million pounds of print cartridge materials diverted from landfills. Worldwide, in 2004, HP recycled an average of 59% of the print cartridge by weight consisting primarily of plastic and metals. Plastics and metals are used to make new products such as HP products, plastic trays and spools. The remaining materials are disposed of in an environmentally responsible manner.

U.S. returns

For a more environmentally responsible return of used cartridges and supplies, HP encourages the use of bulk returns. Simply bundle two or more cartridges together and use the single, pre-paid, pre-addressed UPS label that is supplied in the package. For more information in the U.S., call 1-800-340-2445 or visit the HP Printing Supplies Returns and Recycling Program website at: http://www.hp.com/go/recycle.

Non-U.S. returns

Non-U.S. customers should visit the http://www.hp.com/go/recycle website for further information regarding availability of the HP Supplies Returns and Recycling program.

Paper

This product is capable of using recycled papers, when the paper meets the guidelines outlined in the *HP LaserJet Printer Family Print Media Guide*. Go to http://www.hp.com/support/ljpaperguide to download this guide in PDF format. This product is suitable for the use of recycled paper according to EN12281:2002.

Material restrictions

This product does not contain added mercury.

This product does not contain batteries.

For recycling information, you can contact http://www.hp.com/go/recycle or contact your local authorities or the Electronics Industry Alliance at http://www.eiae.org.

Disposal of waste equipment by users in private households in the European Union

This symbol on the product or on its packaging indicates that this product must not be disposed of with your other household waste. Instead, it is your responsibility to dispose of your waste equipment by handing it over to a designated collection point for the recycling of waste electrical and electronic equipment. The separate collection and recycling of your waste equipment at the time of disposal will

Download Service Manual And Resetter Printer at http://printer1.blogspot.com

help to conserve natural resources and ensure that it is recycled in a manner that protects human health and the environment. For more information about where you can drop off your waste equipment for recycling, please contact your local city office, your household waste disposal service or the shop where you purchased the product.

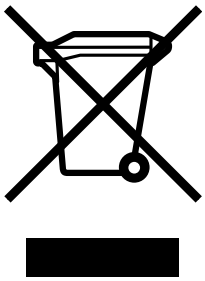

Material safety data sheet

Material Safety Data Sheets (MSDS) for supplies containing chemical substances, such as toner, can be obtained by contacting the HP website at http://www.hp.com/go/msds or http://www.hp.com/hpinfo/community/environment/productinfo/safety.

Extended warranty

HP SupportPack provides coverage for the HP hardware product and all HP-supplied internal components. The hardware maintenance covers a three-year period from the date of the HP product purchase. The customer must purchase HP SupportPack within 90 days of the HP product purchase. For more information, contact the HP Customer Care Service and HP Customer Support Group. See HP Customer Care on page 236.

Spare parts and supplies availability

Spare parts and consumable supplies for this product will be available for at least five years after production has stopped.

For more information

To obtain information about these environmental topics:

- Product environmental profile sheet for this and many related HP products
- HP's commitment to the environment
- HP's environmental management system
- HP's end-of-life product return and recycling program
- MSDS

See: http://www.hp.com/go/environment or http://www.hp.com/hpinfo/community/environment/productinfo/safety.

Download Service Manual And Resetter Printer at http://printer1.blogspot.com

Declaration of conformity

Declaration of Conformity
according to ISO/IEC Guide 22 and EN 45014

Manufacturer's Name:	Hewlett-Packard Company
Manufacturer's Address:	11311 Chinden Boulevard, Boise, Idaho 83714-1021, USA
declares, that the product	
Product Name:	HP Color LaserJet 2605 Series
Regulatory Model Number[3]:	BOISB-0409–02
Product Options:	Including: Q6459A —Optional 250-Sheet Input Tray All
Toner Cartridges:	Q6000A, Q6001A, Q6002A, Q6003A

conforms to the following Product Specifications:

Safety:	IEC 60950-1:2001 / EN60950-1:2001 +A11 IEC 60825-1:1993 +A1 +A2/ EN 60825-1:1994 +A1 +A2 (Class 1 Laser/LED Product) GB4943-2001
EMC:	CISPR22:1993 +A1 +A2 / EN55022:1994 + A1 + A2 —1 Class B[1] EN 61000-3-2:2000 EN 61000-3-3:1995 +A1 EN 55024:1998 +A1 +A2 FCC Title 47 CFR, Part 15 Class B[2] / ICES-003, Issue 4 GB9254-1998, GB17625.1-2003

Supplementary Information:

The product herewith complies with the requirements of the EMC Directive 89/336/EEC and the Low Voltage Directive 73/23/EEC, and carries the CE-Marking accordingly.

1) The product was tested in a typical configuration with Hewlett-Packard Personal Computer Systems.

2) This Device complies with Part 15 of the FCC Rules. Operation is subject to the following two Conditions: (1) this device may not cause harmful interference, and (2) this device must accept any interference received, including interference that may cause undesired operation.

3) For regulatory purposes, this product is assigned a Regulatory model number. This number should not be confused with the product name or the product number(s).

Boise, Idaho , USA

22 December, 2005

For regulatory topics only:

Australia Contact:	Product Regulations Manager, Hewlett-Packard Australia Ltd., 31-41 Joseph Street, Blackburn, Victoria 3130, Australia.
European Contact:	Your Local Hewlett-Packard Sales and Service Office or Hewlett-Packard Gmbh, Department HQ-TRE / Standards Europe, Herrenberger Strasse 140, D-71034 Böblingen, , Germany, (FAX: +49-7031-14-3143)
USA Contact:	Product Regulations Manager, Hewlett-Packard Company, PO Box 15, Mail Stop 160, Boise, Idaho 83707-0015, USA, (Phone: 208-396-6000)

Download Service Manual And Resetter Printer at http://printer1.blogspot.com

Country/region-specific safety statements

Laser safety statement

The Center for Devices and Radiological Health (CDRH) of the U.S. Food and Drug Administration has implemented regulations for laser products manufactured since August 1, 1976. Compliance is mandatory for products marketed in the United States. The printer is certified as a "Class 1" laser product under the U.S. Department of Health and Human Services (DHHS) Radiation Performance Standard according to the Radiation Control for Health and Safety Act of 1968.

Since radiation emitted inside the printer is completely confined within protective housings and external covers, the laser beam cannot escape during any phase of normal user operation.

⚠ **WARNING!** Using controls, making adjustments, or performing procedures other than those specified in this user guide may result in exposure to hazardous radiation.

Canadian DOC statement

Complies with Canadian EMC Class B requirements.

« Conforme à la classe B des normes canadiennes de compatibilité électromagnétiques (CEM). »

Korean EMI statement

사용자 안내문 (B 급 기기)

이 기기는 비업무용으로 전자파장해검정을 받은 기기로서, 주거지역에서는 물론 모든 지역에서 사용할 수 있습니다.

VCCI statement (Japan)

この装置は，情報処理装置等電波障害自主規制協議会（ＶＣＣＩ）の基準に基づくクラスＢ情報技術装置です。この装置は，家庭環境で使用することを目的としていますが，この装置がラジオやテレビジョン受信機に近接して使用されると，受信障害を引き起こすことがあります。
取り扱い説明書に従って正しい取り扱いをして下さい。

Download Service Manual And Resetter Printer at http://printer1.blogspot.com

Finnish laser statement

LASERTURVALLISUUS

LUOKAN 1 LASERLAITE

KLASS 1 LASER APPARAT

HP Color LaserJet 2605, 2605dn, 2605dtn -laserkirjoitin on käyttäjän kannalta turvallinen luokan 1 laserlaite. Normaalissa käytössä kirjoittimen suojakotelointi estää lasersäteen pääsyn laitteen ulkopuolelle.

Laitteen turvallisuusluokka on määritetty standardin EN60825-1 (1994) mukaisesti.

VAROITUS!

Laitteen käyttäminen muulla kuin käyttöohjeessa mainitulla tavalla saattaa altistaa käyttäjän turvallisuusluokan 1 ylittävälle näkymättömälle lasersäteilylle.

VARNING!

Om apparaten används på annat sätt än i bruksanvisning specificerats, kan användaren utsättas för osynlig laserstrålning, som överskrider gränsen för laserklass 1.

HUOLTO

HP Color LaserJet 2605, 2605dn, 2605dtn -kirjoittimen sisällä ei ole käyttäjän huollettavissa olevia kohteita. Laitteen saa avata ja huoltaa ainoastaan sen huoltamiseen koulutettu henkilö. Tällaiseksi huoltotoimenpiteeksi ei katsota väriainekasetin vaihtamista, paperiradan puhdistusta tai muita käyttäjän käsikirjassa lueteltuja, käyttäjän tehtäväksi tarkoitettuja ylläpitotoimia, jotka voidaan suorittaa ilman erikoistyökaluja.

VARO!

Mikäli kirjoittimen suojakotelo avataan, olet alttiina näkymättömälle lasersäteilylle laitteen ollessa toiminnassa. Älä katso säteeseen.

VARNING!

Om laserprinterns skyddshölje öppnas då apparaten är i funktion, utsättas användaren för osynlig laserstrålning. Betrakta ej strålen.

Tiedot laitteessa käytettävän laserdiodin säteilyominaisuuksista:

Aallonpituus 770-800 nm

Teho 5 mW

Luokan 3B laser

Download Service Manual And Resetter Printer at http://printer1.blogspot.com

Download Service Manual And Resetter Printer at http://printer1.blogspot.com

Index

Symbols/Numerics
600 dpi print-quality setting 153

A
accessories
  ordering 181
adhesive labels
  specifications 12, 15
agreements, maintenance 238, 246
alert messages 136
alerts, setting up 45
assembly
  locations 182
  parts list 182

B
background, gray 155
bands, troubleshooting 155
battery specifications 245
bins, output
  features 4
  jams, clearing 146
black and white printing
  troubleshooting 159
Black cartridge
  life expectancy 32
blank pages, troubleshooting 162
built-in networking
  information page, printing 40

C
cables
  USB, troubleshooting 162
calibrating printer
  using HP Toolbox 171
  using HP ToolboxFX 171
cardstock
  printing on 14
  specifications 15
cartridge out override 38
cartridges
  HP fraud hotline 34
  life expectancy 32
  recycling 244
  replacing 33, 86
  status page, printing 41
  status, viewing with HP ToolboxFX 45
  storage specifications 231
characters, troubleshooting 157
checklist, troubleshooting 134
cleaning
  ETB 165, 169
  fuser 167
  mode 169
  using HP ToolboxFX 172
clearing jams
  common locations 142
  input areas 149
  inside printer 143, 144, 147
  output areas 146
cold reset 164
color
  calibration 39
  troubleshooting 158
components
  locating 6
Configuration page
  printing 40
configuration page 166
configurations, printer 2
consumables
  availability 246
  life expectancies 32
  recycling 244
  specifications 230
  status page, printing 41
contracts, maintenance 238, 246
control panel
  HP ToolboxFX settings 51
  messages 136
  removal and replacement 114
control panel display test 169
covers
  locations 188
  parts list 188
covers, document
  cardstock, printing on 14
  paper specifications 15
creases, troubleshooting 158
crooked pages 157
curled media 157
custom paper sizes 14
customer support
  maintenance agreements 238, 246
  repacking printer 239
  service information form 240
Cyan cartridge
  life expectancy 32

D
DC controller
  removal and replacement 108
declaration of conformity 247
defaults
  restoring 169
defects
  correcting 153
  repetitive image defects 174
demo page 166
Demo page, printing 40
diagnostic tools
  network 173
  repetitive image defect ruler 174
diagrams
  assemblies 182
  covers 188

Download Service Manual And Resetter Printer at http://printer1.blogspot.com

general circuit 222
input devices 210
internal assemblies 192
dimensions, printer 230
documentation
ordering 181
Documentation tab, HP ToolboxFX 46
dots per inch (dpi)
print settings 153
specifications 4
dots, troubleshooting 155
dpi (dots per inch)
print settings 153
specifications 4
drivers
operating systems supported 8
duplexing drive unit
removal and replacement 124
duplexing driver PCA
removal and replacement 129
duplexing mechanism 75

E
E-label reader 88, 137, 150
e-mail alerts, setting up 45
electrical specifications 230
embedded Web server
using 51
energy consumption 230
engine control system 56
engine test print 163
engine, cleaning 35
envelopes
specifications 10, 15
environmental
features 244
paper specifications 10
printer specifications 231
error messages 136
ETB
removal and replacement 89
Event log 45
event log 166, 168
extended warranty 238, 246

F
faded print 154
FCC statements 243
firmware updates 175
fonts
PostScript 4
formatter
removal and replacement 105
fraud hotline 34
fuser
cleaning page 167
removal and replacement 97

G
general circuit diagram 222
general timing chart 80
gray background, troubleshooting 155
grayscale
troubleshooting 159

H
heavy paper
printing on 14
specifications 15
Help tab, HP ToolboxFX 46
HP built-in networking
information page, printing 40
HP customer care 236
HP fraud hotline 34
HP LaserJet glossy paper
printing 13
HP LaserJet photo paper
media 13
HP LaserJet Tough paper 13
HP Printing Supplies Returns and Recycling Program 244
HP SupportPack 238, 246
HP ToolboxFX
calibrating printer 39
calibrating the printer 171
cleaning page 172
configuration page 172
Documentation tab 46
extended print modes 151
Help tab 46
Network Settings tab 51
operating systems supported 8
print quality menu 152
print quality troubleshooting pages 171
print types 151
Status tab 45
System Settings tab 47
toner level, checking from 32
humidity specifications
paper, storing 10
printer environment 231

I
image formation system 59
image quality
HP ToolboxFX settings 49
print, troubleshooting 154
information pages, printing 40
input devices
locations 210
parts list 210
input trays
features 4
installing 21
jams, clearing 149
media supported 14
installing
input trays 21
interface ports
types included 4
internal assembly
locations 192
parts list 192

J
jams
causes of 142
duplex area 144
input areas 149
inside printer 143, 144
output areas 146
top output area 147
top output bin 147

L
labels
specifications 12, 15
language
information pages 40
laser safety statements 248
letterhead
printing 13
life expectancies, supplies 32
light print, troubleshooting 154
lightness
faded print, troubleshooting 154
lines, troubleshooting

Download Service Manual And Resetter Printer at http://printer1.blogspot.com

printed pages 155
loading media
tray 2 23
location
duplexing mechanism 75
fan 73
printed circuit assemblies 73, 74
solenoid 74
solenoids 73
loose toner, troubleshooting 156

M
Macintosh
drivers 8
features supported 8
Macintosh Installer
operating systems supported 8
Magenta cartridge
life expectancy 32
mailing labels
specifications 12, 15
maintenance
agreements 238, 246
replacing print cartridges 32
margins, envelopes 11
Material Safety Data Sheet 246
media
cardstock 14
curled, troubleshooting 157
custom-sized 14
envelopes 10
HP LaserJet glossy paper 13
HP LaserJet photo paper 13
HP ToolboxFX settings 50
jams 142
labels 12
letterhead 13
selecting 9
specifications 9
transparencies 13
tray 1, types supported 14
tray 2, types supported 14
tray 3, types supported 14
wrinkled 158
wrong size 160
wrong type 160
memory
slots 5
memory-card assembly
removal and replacement 119
mercury specifications 245
messages
alert and warning 136
error 136
event log 168
event log only 140
status log 167
motors 73

N
network
diagnostic tools 173
Network Settings tab, HP ToolboxFX 51
networks
information pages, printing 40
non-HP print cartridges 33
NVRAM initializer
super 164

O
on-site service agreements 246
online customer support 236
operating environment, specifications 231
operating systems supported 8
ordering
accessories 181
parts 181
output bin
features 4
output bins
jams, clearing 146
output quality
HP ToolboxFX settings 49
print, troubleshooting 154
overhead transparencies
specifications 13, 15
ozone specifications 244

P
packaging printer 239
page counts
restoring 165
pages
blank 162
not printing 162
printing slowly 162
skewed 157
pages per minute 4
paper
cardstock 14
curled, troubleshooting 157
custom-sized 14
HP LaserJet Tough paper 13
HP ToolboxFX settings 50
jams 142
letterhead 13
selecting 9
specifications 9
tray 1, types supported 14
tray 2, types supported 14
tray 3, types supported 14
wrinkled 158
paper handling issues 160
paper input trays
features 4
jams, clearing 149
media supported 14
paper output bin
features 4
paper output bins
jams, clearing 146
paper pickup roller
removal and replacement 112
parts
assembly locations 182
cover locations 188
input devices 210
internal assembly locations 192
ordering 181
removal and replacement 83
replaceable 178
performance problems 161
phone numbers
HP fraud hotline 34
HP Printing Supplies Returns and Recycling Program 245
support 236
photo memory cards 5
pickup and feed system 69
platforms supported 8
ports
types included 4
PostScript driver, HP ToolboxFX settings 49
power
requirements 230
powersave 169
preprinted paper

Download Service Manual And Resetter Printer at http://printer1.blogspot.com

printing on 13
print cartridges
HP fraud hotline 34
life expectancy 32
recycling 244
replacing 33
status page, printing 41
status, viewing with HP ToolboxFX 45
storage specifications 231
print media
specifications 9
print media specifications 9
print modes
extended 151
HP ToolboxFX 151
print quality
HP ToolboxFX settings 49
identifying defects 153
improving 151
issues 154
menu 152
settings 153
specifications 4
troubleshooting 154, 167
print quality defects
correcting 153
print servers
information page, printing 40
print types
HP ToolboxFX 151
printer
calibrating 81
dimensions 18
performance problems 161
printer drivers
operating systems supported 8
printing
troubleshooting 162
printing a configuration page
using HP ToolboxFX 172
procedure
pre-servicre 85

Q
quality
HP ToolboxFX settings 49
print settings 153
print, troubleshooting 154
specifications 4

R
rear output door
features 4
recycling
plastics 244
print cartridges 244
refilled print cartridges 33
regulatory statements
declaration of conformity 247
FCC 243
laser safety 248
Material Safety Data Sheet 246
removal
control panel 114
DC controller 108
duplexing drive unit 124
duplexing driver PCA 129
ETB 89
formatter 105
fuser 97
memory-card assembly 119
paper pickup roller 112
print cartridges 86
separation pad 111
removal and replacement 83
repacking printer 239
repetitive defects, troubleshooting 158
repetitive image defect ruler 174
replaceable parts 178
replacing
control panel 114
DC controller 108
duplexing drive unit 124
duplexing driver PCA 129
ETB 89
formatter 105
fuser 97
memory-card assembly 119
paper pickup roller 112
print cartridges 86
separation pad 111
replacing print cartridges 33
reports
secondary service 169
status 167
reports menu 173
reports, printing 40
reset, cold 164
resolution
print settings 153
specifications 4
restoring
defaults 169
factory defaults 169
page counts 164, 165
serial number 164
restoring serial number 165

S
scatter, troubleshooting 158
secondary service menu
clean ETB 169
control panel display test 169
reports 169
selection guidelines
media 9
separation pad
removal and replacement 111
sequence of operation 56
serial number
restoring 165
servers
information page, printing 40
service
agreements 238, 246
HP ToolboxFX settings 51
information form 240
repacking printer 239
service approach 85
service menu 169
service menu settings
cleaning mode 169
powersave 169
restoring defaults 169
service mode functions
cleaning mode 164, 165
cold reset 164
NVRAM initializer 164
super NVRAM initializer 164
settings
HP ToolboxFX 47
shipping printer 239
site preparation 18
size, printer 230
sizes, media
custom 14
skewed pages 157
slots
memory 5

Download Service Manual And Resetter Printer at http://printer1.blogspot.com

smeared toner, troubleshooting 156
software
HP ToolboxFX 44
operating systems supported 8
ordering 181
updates 175
solenoid 74
solenoids 73
space requirements 18
special media
cardstock 14
custom-sized 14
envelopes 10
HP LaserJet glossy paper 13
labels 12
letterhead 13
specifications 15
transparencies 13
specifications
envelopes 10
environmental 231
labels 12
Material Safety Data Sheet 246
motors and fans 57
paper 9
printer 230
printer features 4
transparencies 13
trays, media supported 14
specks, troubleshooting 155
speed
specifications 4
spots, troubleshooting 155
status
alerts, HP ToolboxFX 45
Supplies Status page, printing 41
viewing with HP ToolboxFX 45
status log 167
status page 166
Status tab, HP ToolboxFX 45
storing
envelopes 11
paper 10
print cartridges 33
printer 231
streaks, troubleshooting 155
super NVRAM initializer 164
supplies
availability 246
life expectancies 32
ordering 181
recycling 244
specifications 230
status page 41
status, viewing with HP ToolboxFX 45
support
maintenance agreements 238, 246
repacking printer 239
service information form 240
SupportPack, HP 238, 246
system requirements 19
System Settings tab, HP ToolboxFX 47
systems
engine control 56
image formation 59
pickup and feed 69

T

technical support
maintenance agreements 238, 246
repacking printer 239
service information form 240
web sites 181
telephone numbers
HP fraud hotline 34
HP Printing Supplies Returns and Recycling Program 245
support 236
temperature specifications
paper, storing 10
printer environment 231
text, troubleshooting
misformed characters 157
timing chart 80
toner
loose, troubleshooting 156
scatter, troubleshooting 158
smeared, troubleshooting 156
specks, troubleshooting 155
Toolbox. *See* HP ToolboxFX
ToolboxFX
operating systems supported 8
top output bin
features 4
transparencies
specifications 13, 15
tray 1
loading 21
tray 2
loading 23
tray 3
loading 23
trays
features 4
jams, clearing 149
media supported 14
troubleshooting
blank pages 162
calibrating printer 39
checklist 134
color 158
configuration page 166
Configuration page, printing 40
curled media 157
demo page 166
Demo page, printing 40
event log 166
faded print 154
jams 142
lines, printed pages 155
loose toner 156
pages not printing 162
pages printing slowly 162
print quality issues 154
process 134
repetitive defects 158
replacing print cartridges 33
reports and tools 166
skewed pages 157
status page 166
text 157
toner scatter 158
toner smear 156
toner specks 155
USB cables 162
using HP Toolbox 171
using HP ToolboxFX 171
wrinkles 158
types, media
HP ToolboxFX settings 50

U

updates
software and firmware 175

Download Service Manual And Resetter Printer at http://printer1.blogspot.com

USB port
troubleshooting 162
type included 4

V

vertical lines, troubleshooting 155
voltage requirements 230

W

warning messages 136
warranty
extended 238, 246
print cartridge 235
product 233, 234
wavy paper, troubleshooting 157
websites
customer support 236
HP Printing Supplies Returns and Recycling Program 245
Material Safety Data Sheet 246
weight
printer 230
Windows
versions supported 8
wrinkles, troubleshooting 158

Y

Yellow cartridge
life expectancy 32

Download Service Manual And Resetter Printer at http://printer1.blogspot.com

Download Service Manual And Resetter Printer at http://printer1.blogspot.com

© 2005 Hewlett-Packard Development Company, L.P.

www.hp.com

invent

Q7821-90930

Download Service Manual And Resetter Printer at http://printer1.blogspot.com